FACTORY SUPPLY

FSH-S92-PM
PHASE MAINTENANCE STAND

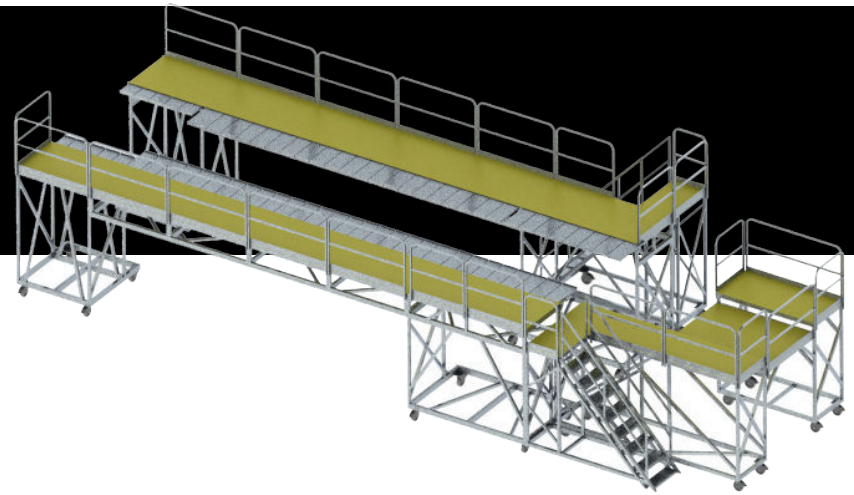

FOR ENGINE, TRANSMISSION, MAIN ROTOR, TAIL ROTOR & FUSELAGE ACCESS

Aircraft technicians use these stands for full phase maintenance and a complete overhaul of the aircraft.

HIGHLIGHTS

- Full phase maintenance fuselage wrap around stands
- Removable hand rails
- 20” locking slide out platform extensions

HELI GRADE SOLUTIONS

TECHNICAL DATA

Height	Fuse: 150"; Tail: 162"
Width	Fuse: 66"; Tail: 162"
Length	Fuse: 410"; Tail: 168"
Unit Weight	6,125 lbs
Shipping Info (DIMS)	40' Shipping Container
Upper Deck Height	Fuse: 108" ; Tail: 120"
Lower Deck Height	Tail: 72"
Platform Dimensions	Fuse: 42" x 410"; Tail: 162" x 90"
Vertical Clearance	Fuse: 150"; Tail: 162"
Load Capacity	1,500 lbs Per Side
Stair Capacity	250 lbs
Step Width	24"
Caster Size	8"

Frame Material	Aluminum
Rail Material	Aluminum
Padding Material	Contact Areas
Platform Material	Diamond Plate / Fiberplate Composite
Finish	Mill / Powder Coat Handrails
Certifications	OSHA 1926.1053; ANSI-ASC 14.2-2017

OPTIONAL ACCESSORIES

Composite Plate Decking	X
Diamond Plate Decking	X

HELICOPTER APPLICATION

Sikorsky S-92	X

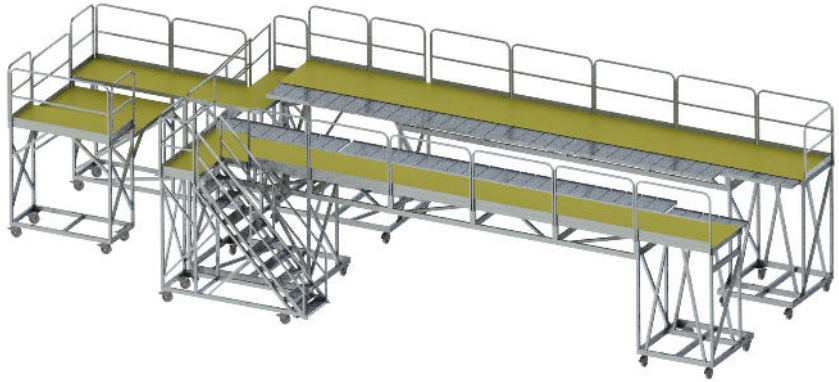

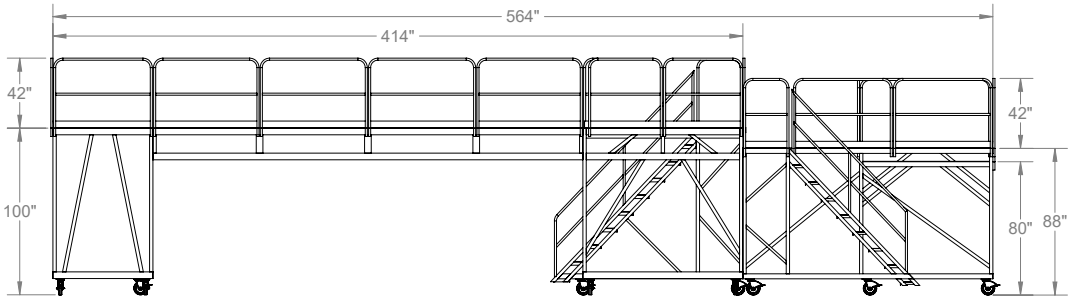
564"
414"
42"
100"
42"
80"
88"

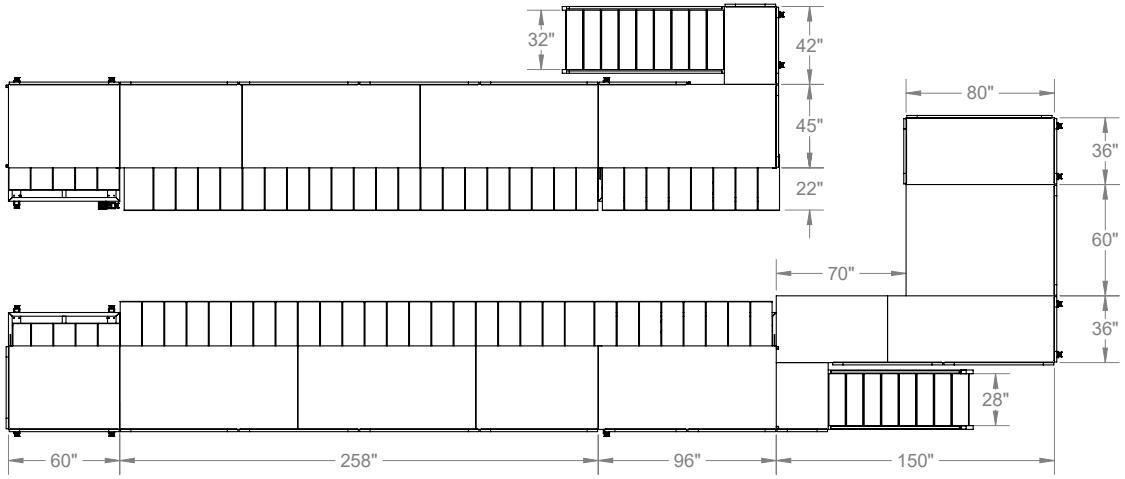
32"
42"
45"
22"
80"
36"
60"
70"
36"
28"
60"
258"
96"
150"

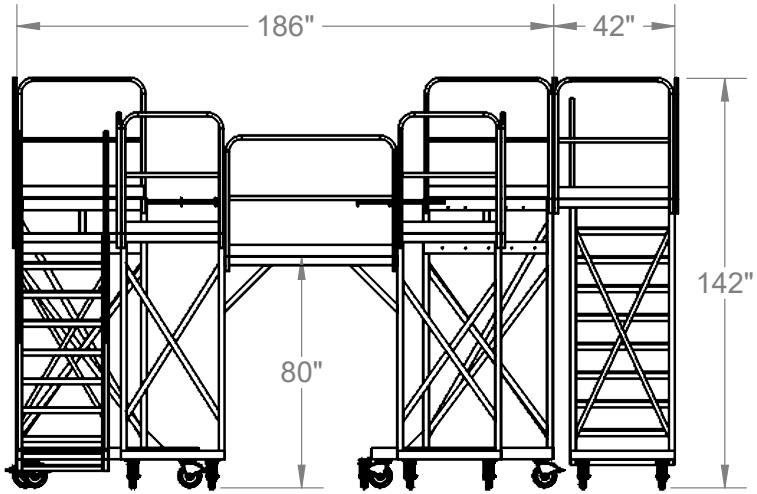
186"
42"
142"
80"