FACTORY SUPPLY

FSH-EC130-PM
MAINTENANCE STAND

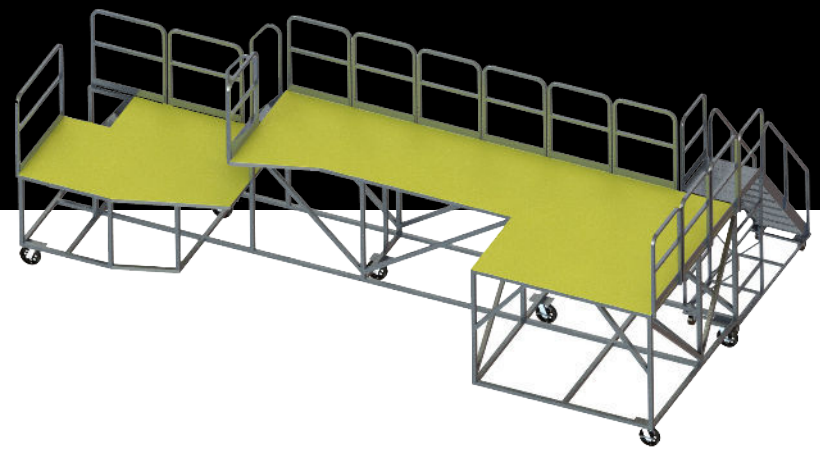

FOR MAIN ROTOR, ENGINE & TRANSMISSION ACCESS

Aircraft technicians use these stands to safely access the main rotor, transmission and engine access along the fuselage.

HIGHLIGHTS

- Full wrap around fuselage stand
- Multi-level platform
- Knocks down for ease of shipping
- Removable hand rails
- Aluminum construction

HELI GRADE SOLUTIONS

TECHNICAL DATA

Height	116"	Frame Material	Aluminum
Width	92"	Rail Material	Aluminum
Length	330"	Padding Material	Contact Areas
Unit Weight	1,500 lbs	Caster Size	8"
Shipping Info (DIMS)	92" x 326" x 75" x 1,500 lbs	Platform Material	Diamond Plate / Fiberplate Composite
Upper Deck Height	75"	Finish	Mill / Powder Coat Handrails
Lower Deck Height	50"		
Vertical Clearance	116"	Certifications	OSHA 1926.1053; ANSI-ASC 14.2-2017
Platform Dimensions	90" x 44"; 132" x 48"; 72" x 96"		
Load Capacity	1,200 lbs Per Side		
Deck Capacity	1,200 lbs Per Side		
Stair Capacity	250 lbs		
Step Width	24"		

OPTIONAL ACCESSORIES

Composite Plate Decking	X
Diamond Plate Decking	X
Tool Trays	X

HELICOPTER APPLICATION

Eurocopter EC-130 / 135	X
Airbus H130 / 135	X

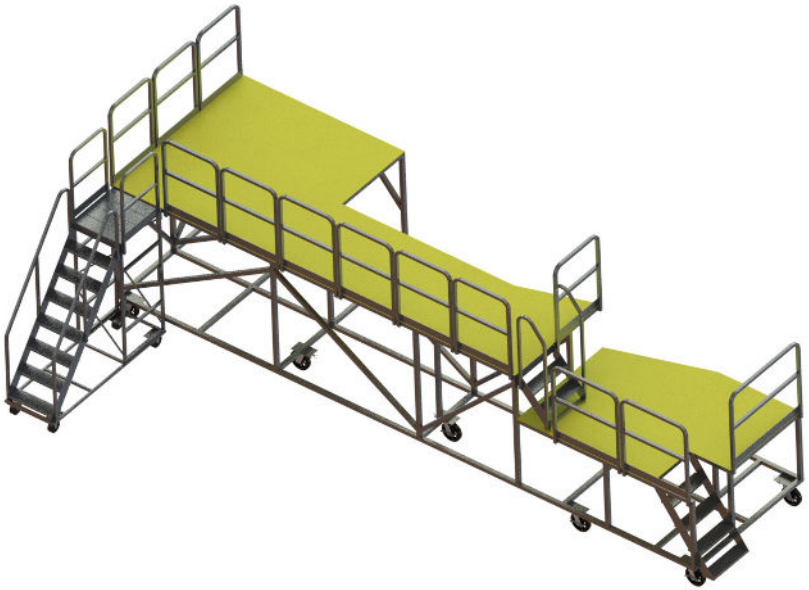

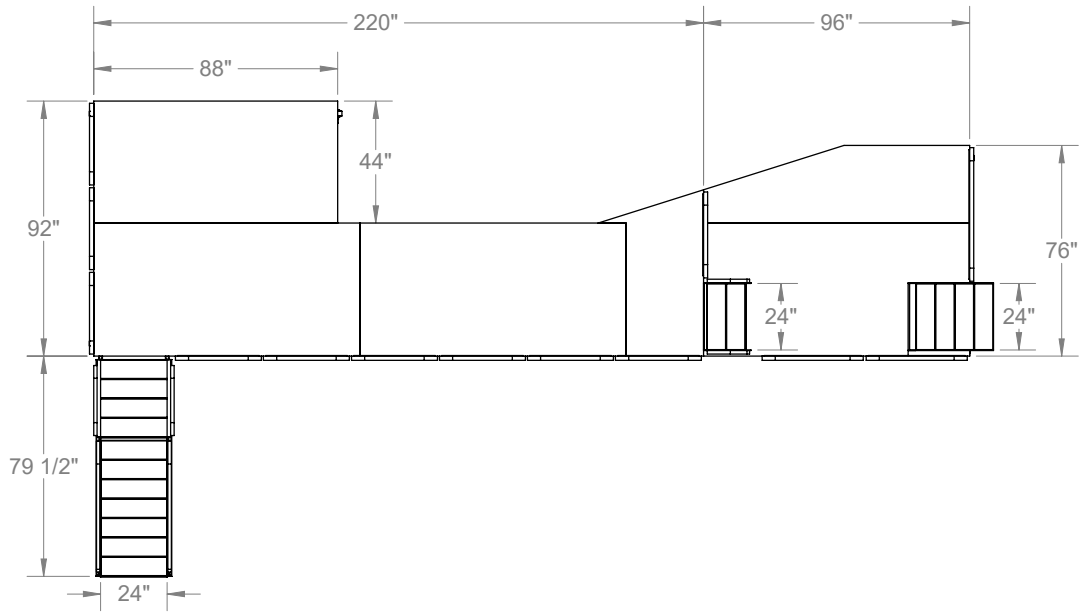
220"
96"
88"
44"
92"
76"
24"
24"
79 1/2"
24"

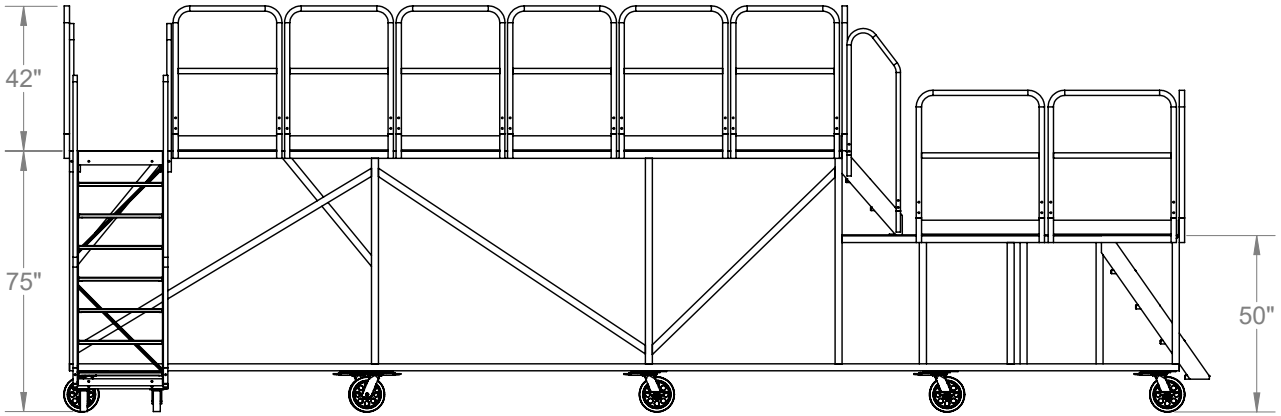
42"
75"
50"

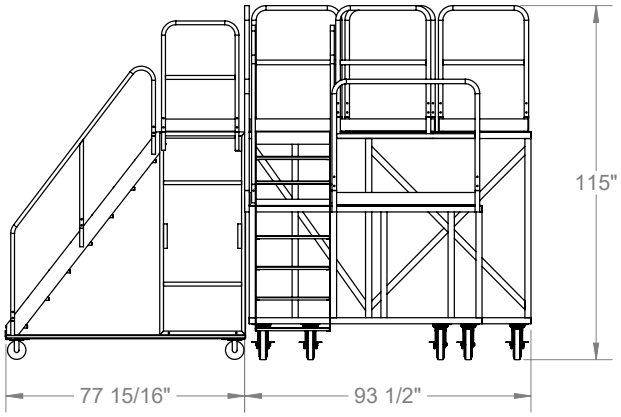
115"
77 15/16"
93 1/2"