FACTORY SUPPLY.COM

FSH-EC145-PM
MAINTENANCE STAND

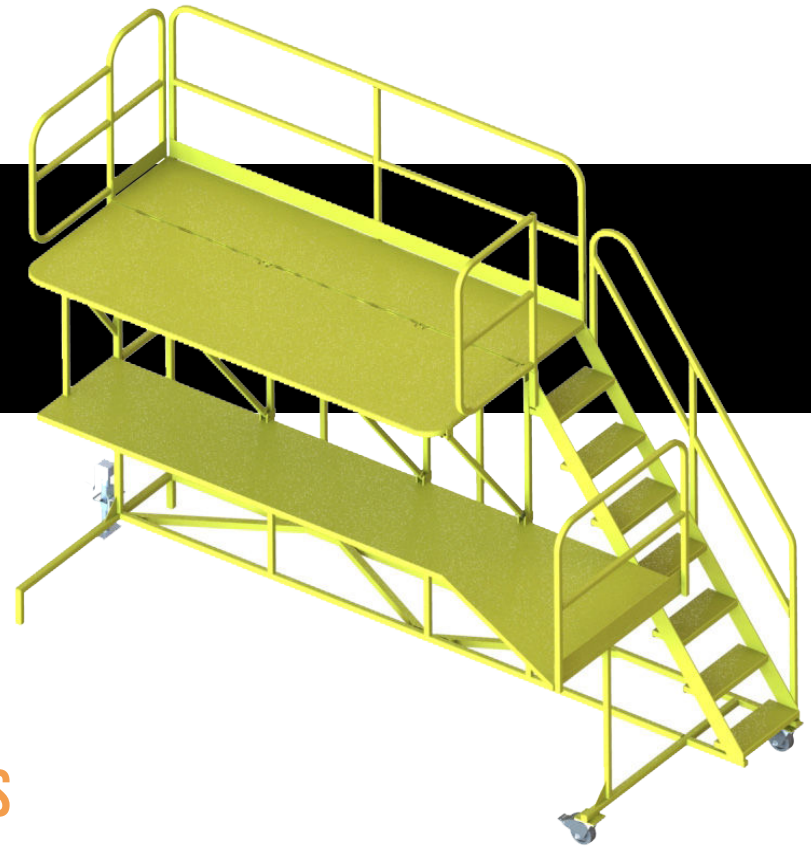

FOR MAIN ROTOR, ENGINE & TRANSMISSION ACCESS

Aircraft technicians use these stands for safe access to the main rotor, transmission and engine access, along the fuselage.

HIGHLIGHTS

- Folding rotor access platform
- Steel heavy duty construction
- Durable powder coat finish

HELI GRADE SOLUTIONS

TECHNICAL DATA

Height	116"	Step Width	18"
Width	48"	Frame Material	Steel
Length	132"	Rail Material	Steel
Unit Weight	990 lbs	Padding Material	Contact Areas
Shipping Info (DIMS)	85" x 60" x 145" x 1,000 lbs	Caster Size	8"
Upper Deck Height	80"	Platform Material	Diamond Plate / Fiberplate Composite
Lower Deck Height	44"	Finish	Powder Coat
Vertical Clearance	116"	Certifications	OSHA 1926.1053; ANSI-ASC 14.2-2017
Platform Dimensions	48" x 96"; 42" x 132"		
Load Capacity	600 lbs		
Deck Capacity	500 lbs Lower / 300 lbs Folding Platform		
Stair Capacity	250 lbs		

OPTIONAL ACCESSORIES

Composite Plate Decking	X
Diamond Plate Decking	X
Tool Trays	X

HELICOPTER APPLICATION

Eurocopter EC-145	X
Airbus H145	X

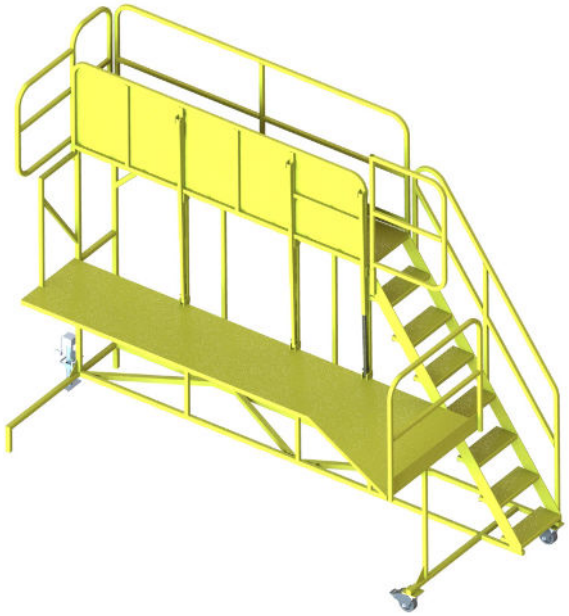
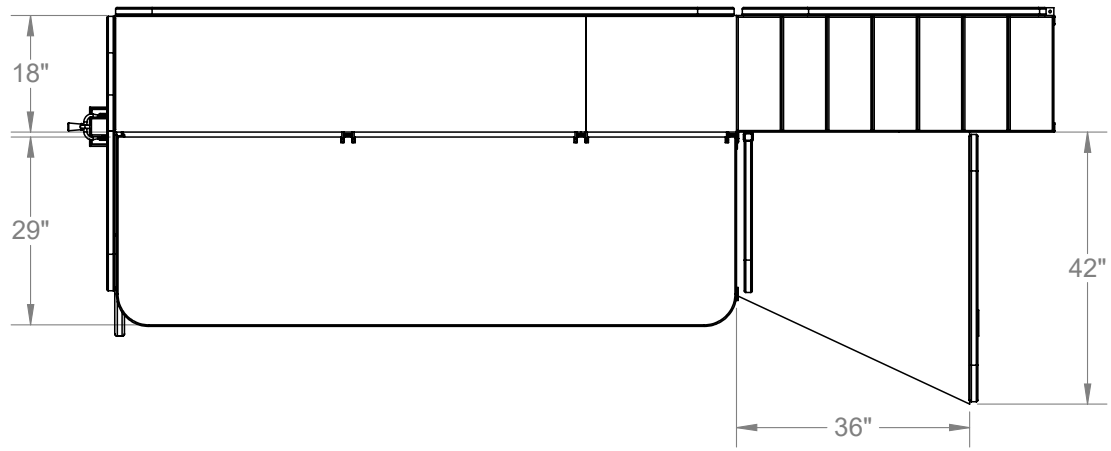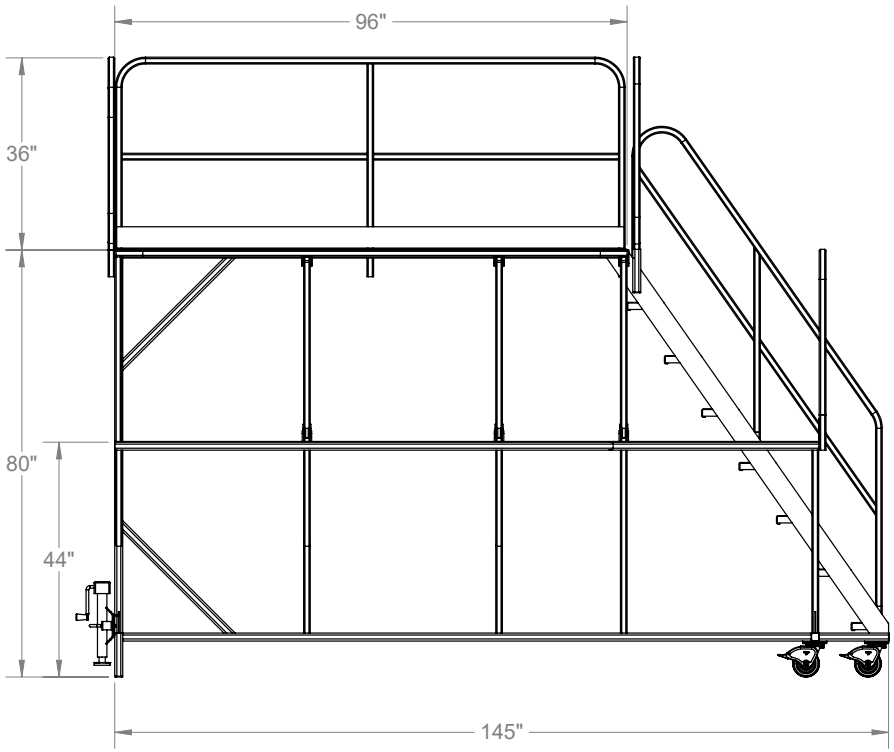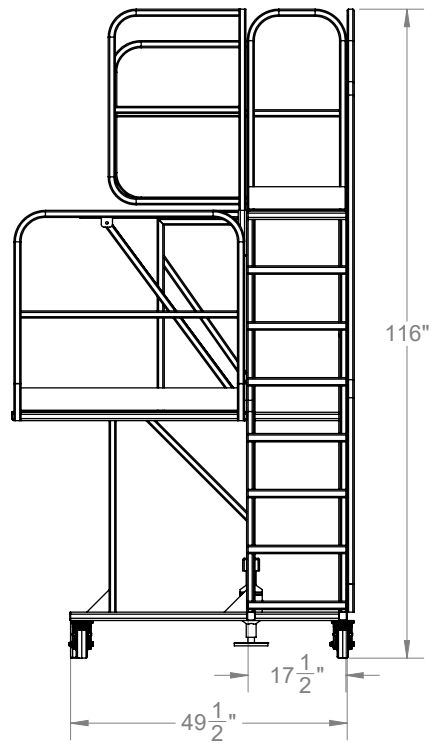
UPPER ACCESS PLATFORM IN FOLDED POSITION