FACTORY SUPPLY.COM

FSH-011TD
TAIL DOCK ACCESS STAND

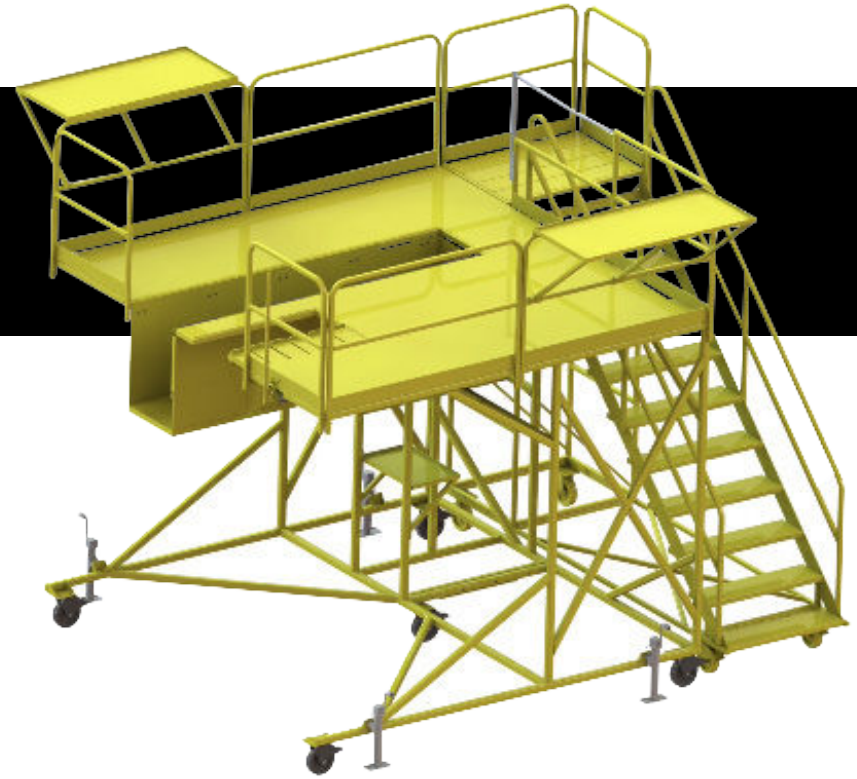

FOR TAIL ROTOR ACCESS
Aircraft technicians use these stands for routine inspection, maintenance, and repair of helicopter tail rotor components.

HIGHLIGHTS
- Kick out slide platform extensions
- Rotor access tray
- Work trays

HELI GRADE SOLUTIONS

TECHNICAL DATA

Height	139"	Rail Material	Steel
Width	124"	Padding Material	Contact Areas
Length	162"	Platform Material	Diamond Plate / Fiberplate Composite
Unit Weight	4,200 lbs		
Shipping Info (DIMS)	94" x 70" x 120" / 94" x 60" x 120" / 120" x 36" x 45"	Finish	Powder Coat
Deck Height	102"	Certifications	OSHA 1926.1053; ANSI-ASC 14.2-2017
Vertical Clearance	140"		
Platform Dimensions	120" x 124"		
Load Capacity	1,500 lbs		
Stair Capacity	250 lbs		
Step Width	36"		
Caster Size	8"		
Frame Material	Steel		

OPTIONAL ACCESSORIES

Composite Plate Decking	X
Diamond Plate Decking	X
Grip-Strut Tread	X

HELICOPTER APPLICATION

FST-003-Sikorsky-SH-60	X
MH-60-Seahawk	X

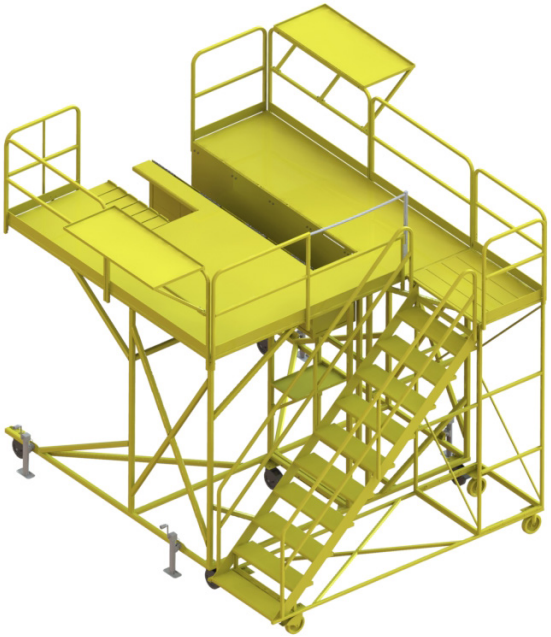

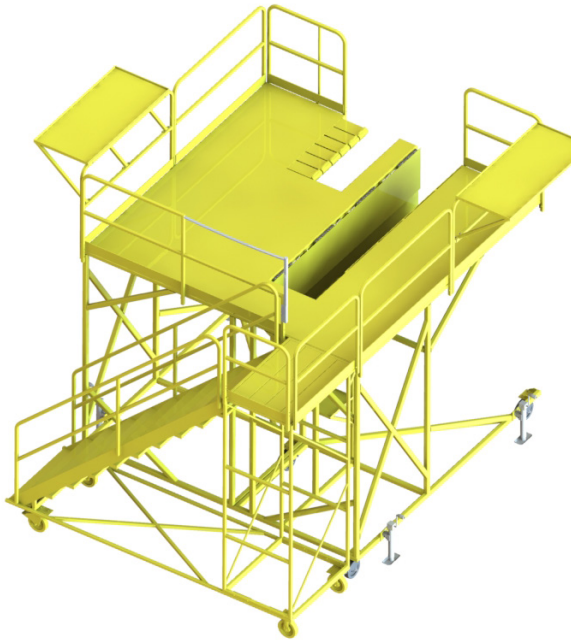

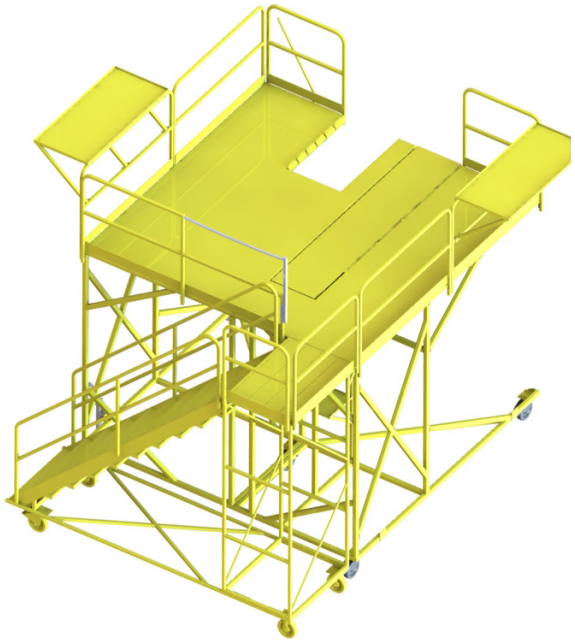

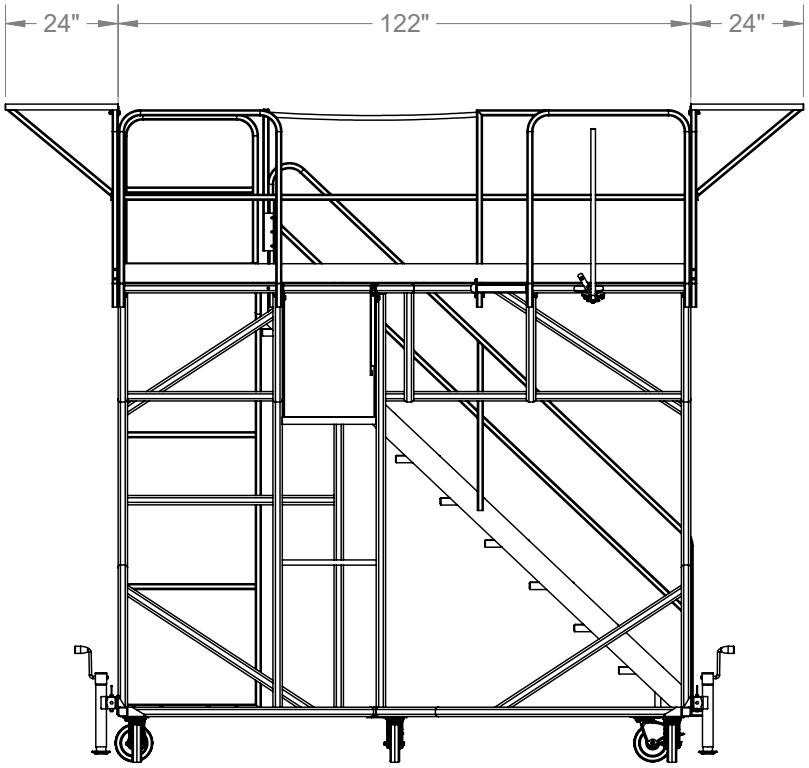
24"
122"
24"

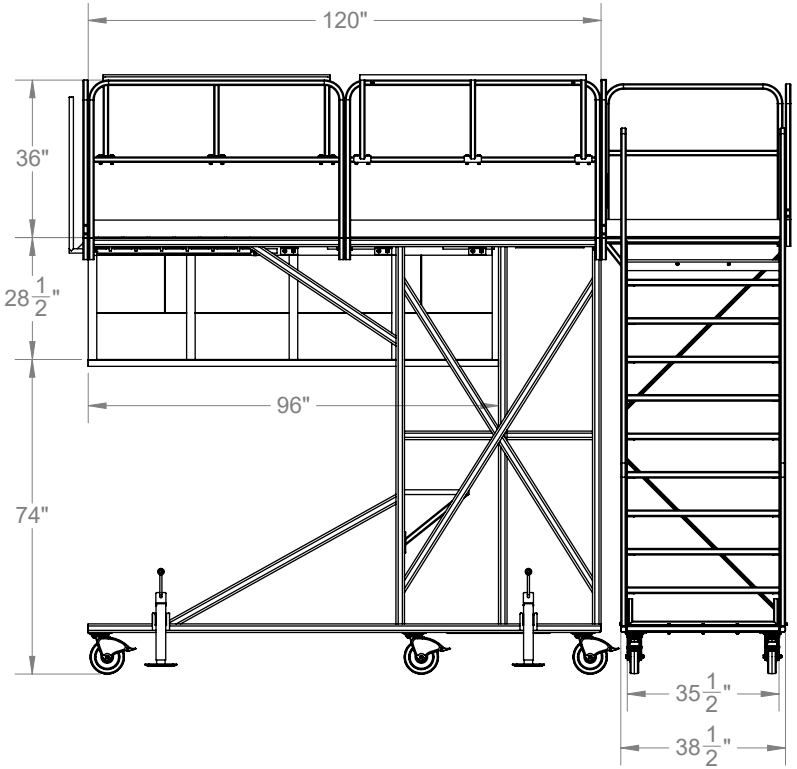
120"
36"
28 1/2"
96"
74"
35 1/2"
38 1/2"