FACTORY SUPPLY.COM

FSB-0002
BLADE RACK

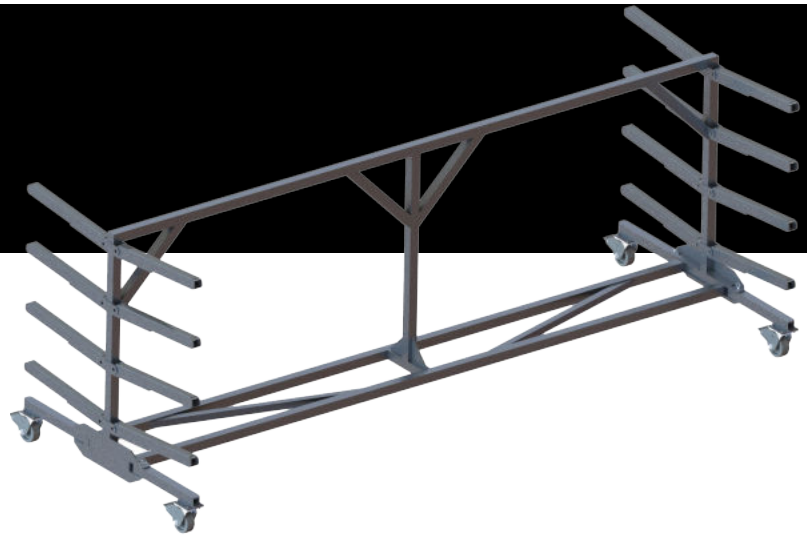

FOR HELICOPTER BLADE STORAGE
Aircraft technicians use these racks as a storage system for helicopter rotor blades.

HIGHLIGHTS
- Rubber lined blade shelves
- Folds for compact storage
- Light weight aluminum construction

HELI GRADE SOLUTIONS

TECHNICAL DATA

Height	55"
Width	40"
Length	120"
Unit Weight	120 lbs
Shipping Info (DIMS)	120" x 24" x 76" x 200 lbs
Vertical Clearance	55"
Load Capacity	650 lbs
Blade Capacity	4 Blades
Frame Material	Aluminum
Rail Material	Aluminum
Padding Material	Contact Areas
Caster Size	5"
Finish	Mill
Certifications	OSHA 1926.1053; ANSI-ASC 14.2-2017

HELICOPTER APPLICATION

Universal - Small / Medium Rotorcraft	X
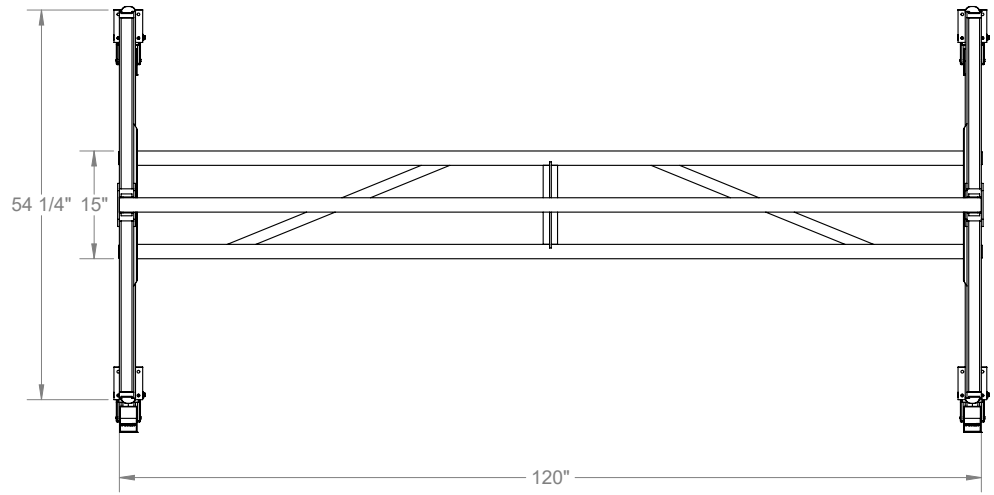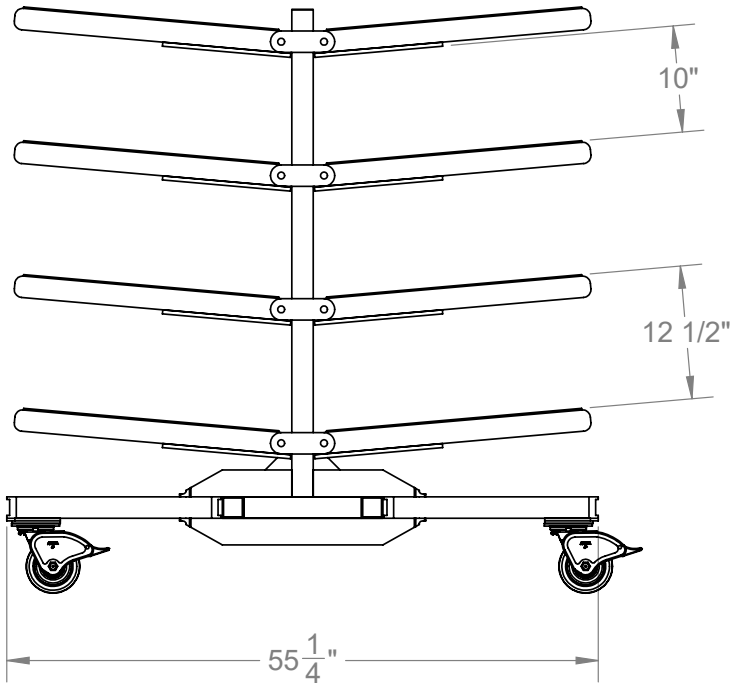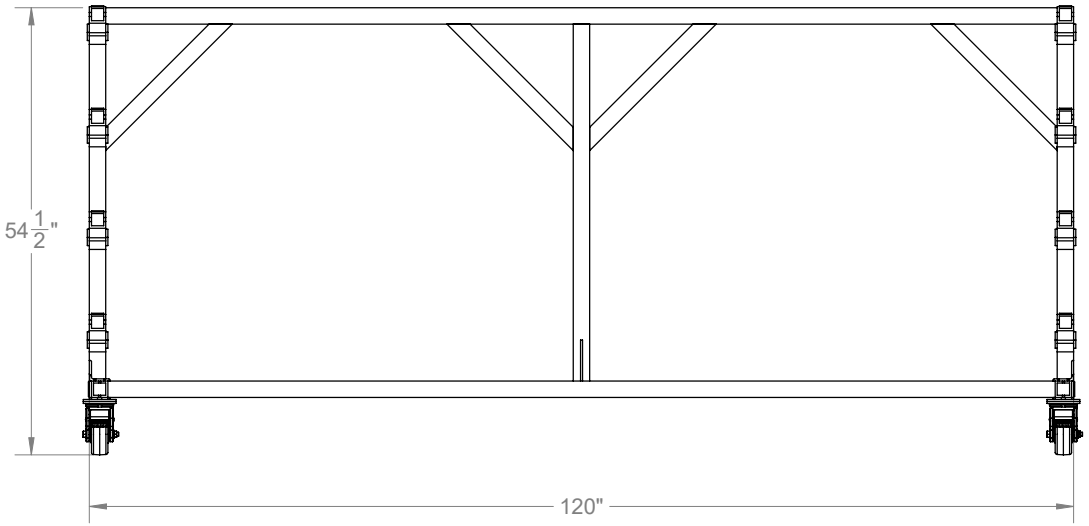
FOLDED POSTION FOR SMALLER STORAGE FOOTPRINT