FSB-0001 – BLADE RACK HEAVY DUTY

FACTORY SUPPLY INC.
ACCESS TO YOUR INDUSTRIAL NEEDS

FSB-0001
BLADE RACK

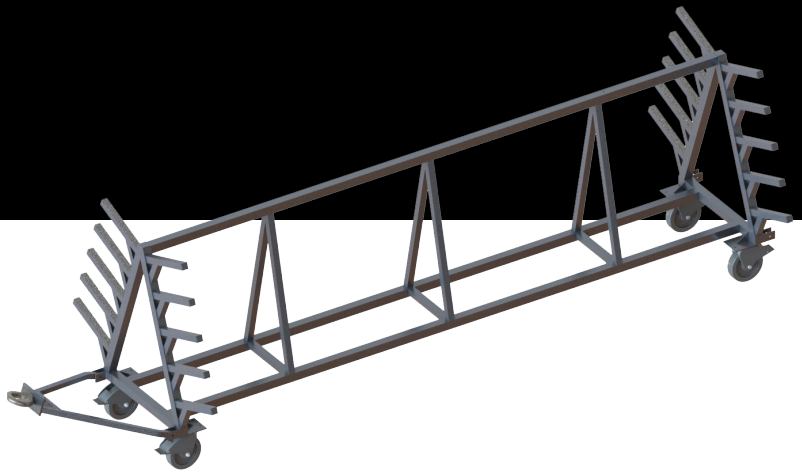

FOR HELICOPTER BLADE STORAGE
Aircraft technicians use these racks as a storage system for helicopter rotor blades.

HIGHLIGHTS
- Rubber lined blade shelves
- Heavy duty construction for larger aircraft blades
- Aluminum construction

HELI GRADE SOLUTIONS

TECHNICAL DATA

Height	50"
Width	56"
Length	152"
Unit Weight	150 lbs
Shipping Info (DIMS)	152" x 53" x 55" x 220 lbs
Vertical Clearance	53"
Load Capacity	750 lbs
Blade Capacity	10 Blades
Frame Material	Aluminum
Rail Material	Aluminum
Padding Material	Contact Areas
Caster Size	8"
Finish	Mill
Certifications	OSHA 1926.1053; ANSI-ASC 14.2-2017

OPTIONAL ACCESSORIES

Tow Bar	X

HELICOPTER APPLICATION

Universal - Large Rotorcraft	X

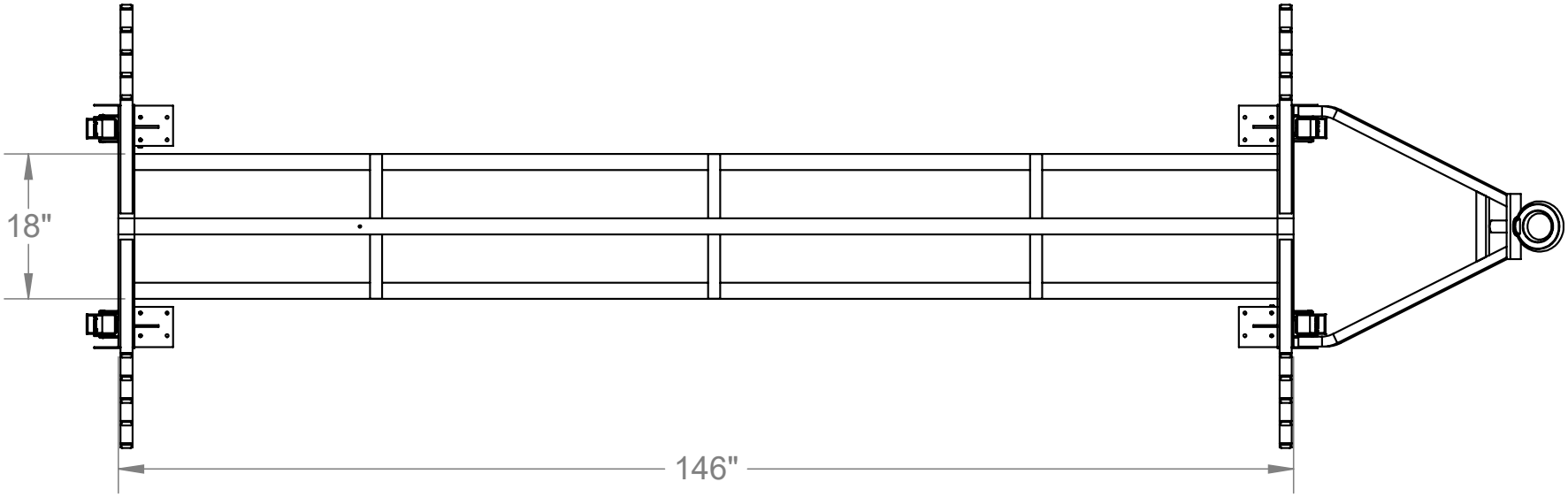
18"
146"

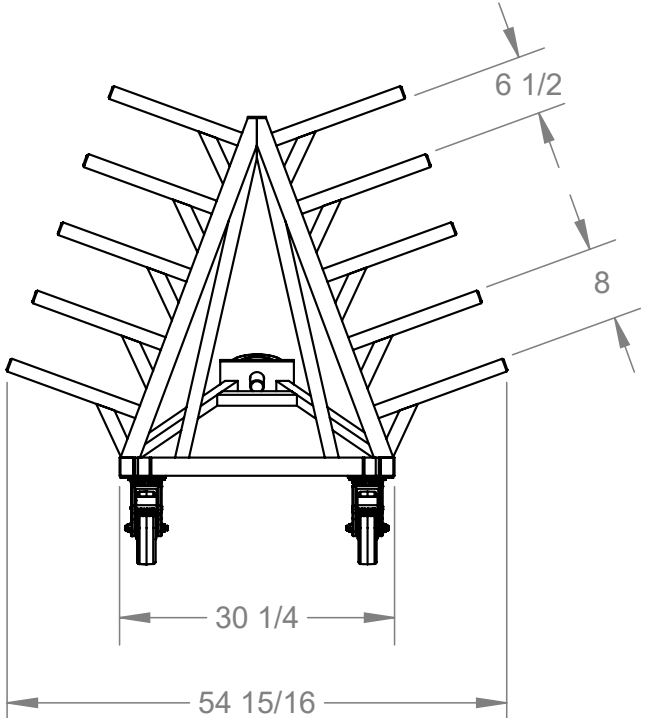
6 1/2
8
30 1/4
54 15/16

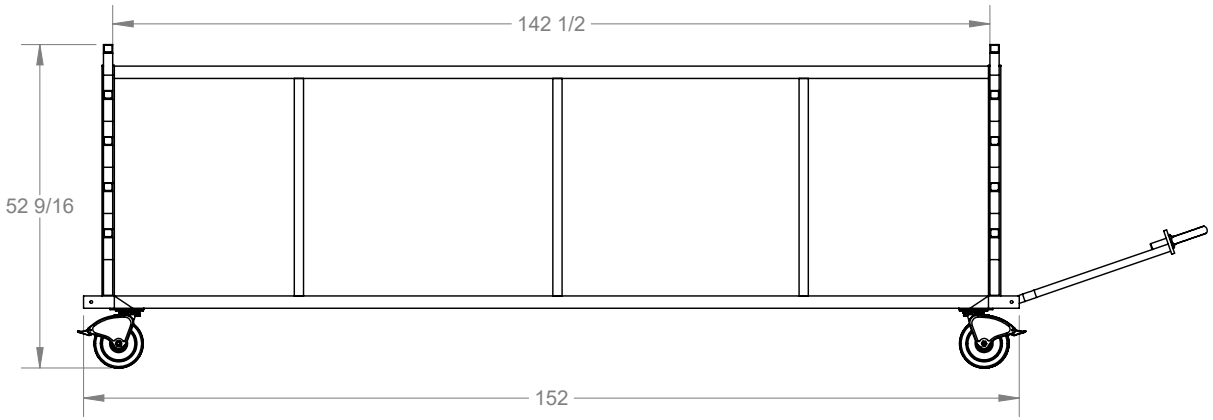
142 1/2
52 9/16
152