FSPR-0003 - PARTS RACK

FACTORY SUPPLY INC.
ACCESS TO YOUR INDUSTRIAL NEEDS

FSPR-0003
PARTS RACK

FOR HELICOPTER PARTS MOVEMENT
Aircraft technicians use these racks as a storage system for helicopter cowling panels and miscellaneous parts.

HIGHLIGHTS
- Padded shelving
- Industrial carpet lined shelves
- Powder coat finish
- All steel construction

HELI GRADE SOLUTIONS

TECHNICAL DATA

Height	72"
Width	45"
Length	96"
Unit Weight	750 lbs
Shipping Info (DIMS)	96" x 48" x 72" x 750 lbs
Vertical Clearance	72"
Load Capacity	1,000 lbs
Caster Size	8"
Frame Material	Steel
Rail Material	Steel
Padding Material	On Shelves
Finish	Powder Coat
Certifications	OSHA 1926.1053; ANSI-ASC 14.2-2017

HELICOPTER APPLICATION

Universal	X

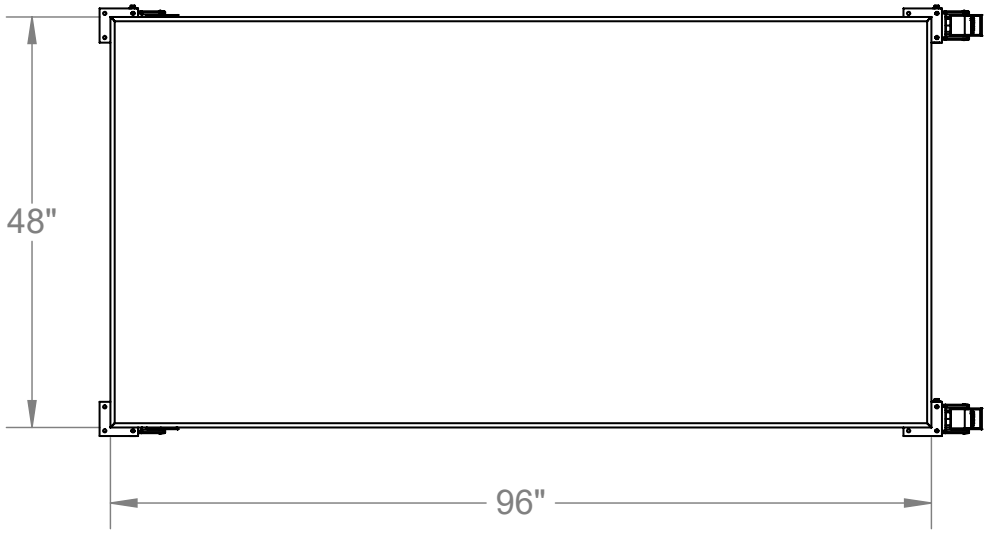
48"
96"

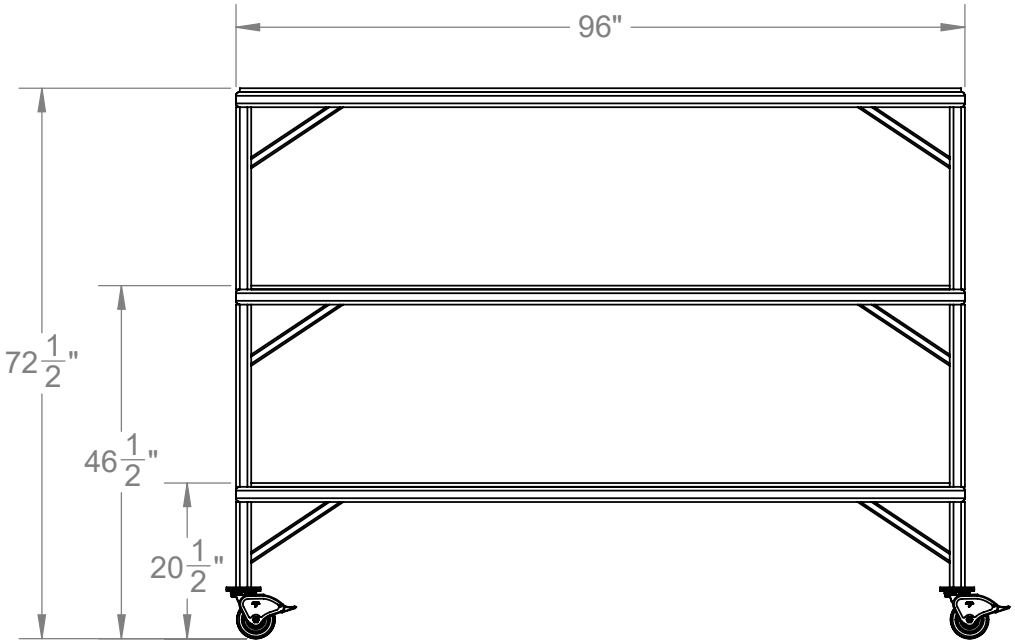
96"
72 1/2"
46 1/2"
20 1/2"

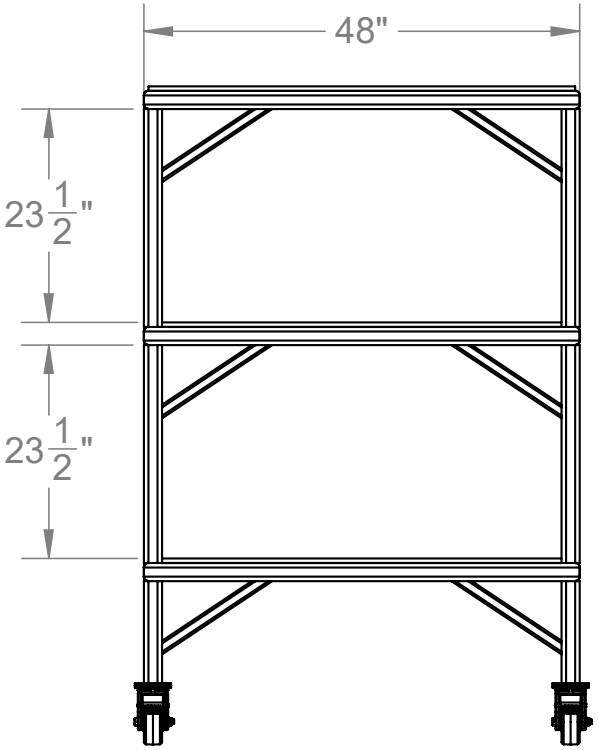
48"
23 1/2"
23 1/2"