FSPR-0001 – HELICOPTER PARTS RACK

FACTORY SUPPLY INC.
ACCESS TO YOUR INDUSTRIAL NEEDS

FSPR-0001
PARTS RACK

FOR HELICOPTER PARTS MOVEMENT
Aircraft technicians use these racks as a universal storage system for helicopter parts.

HIGHLIGHTS
- Locking cabinet
- Industrial carpet lined shelves
- Powder coat finish
- All steel construction

HELI GRADE SOLUTIONS

TECHNICAL DATA

Height	81"
Width	60"
Length	145"
Unit Weight	1,250 lbs
Shipping Info (DIMS)	81" x 60" x 145" x 1,250 lbs
Vertical Clearance	81"
Load Capacity	1,000 lbs
Caster Size	5"
Frame Material	Steel
Rail Material	Steel
Padding Material	On Shelves
Finish	Powder Coat
Certifications	OSHA 1926.1053; ANSI-ASC 14.2-2017

HELICOPTER APPLICATION

Universal	X

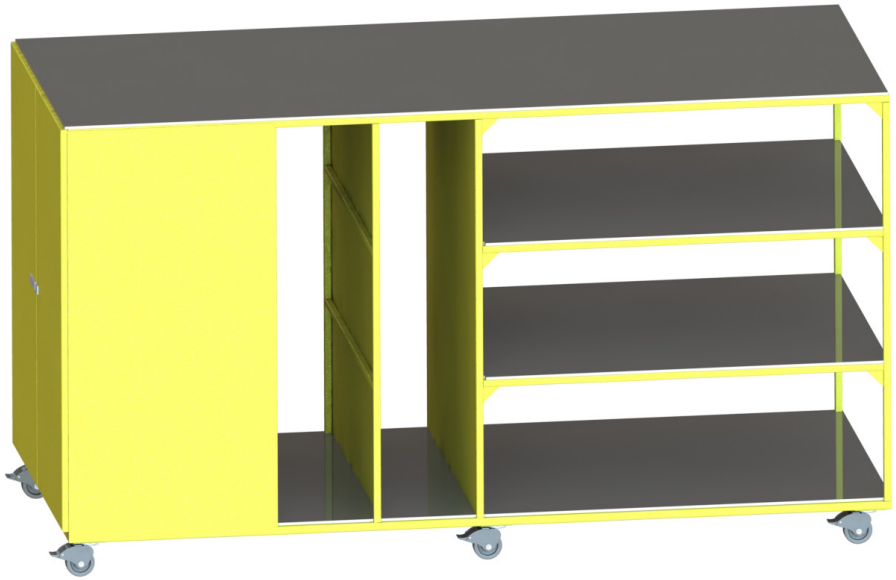

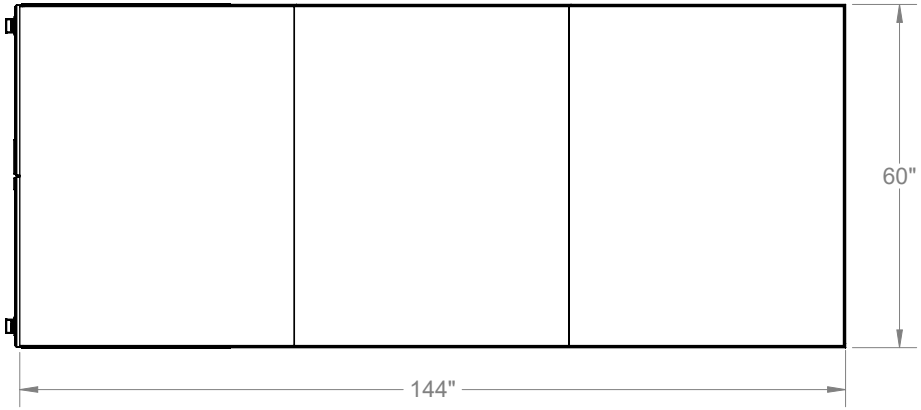
60"
144"

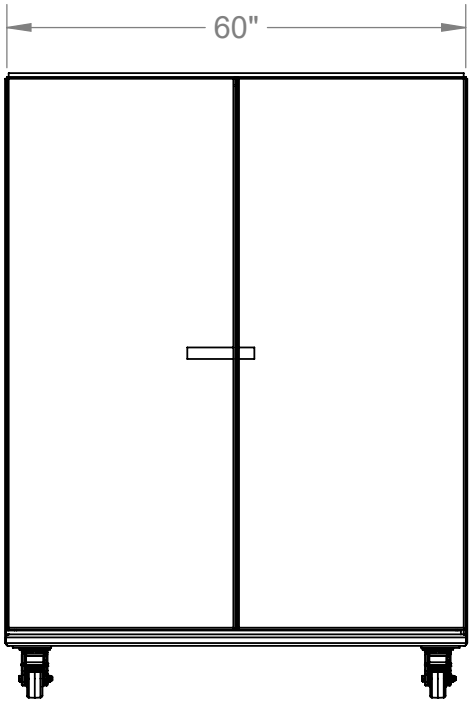
60"

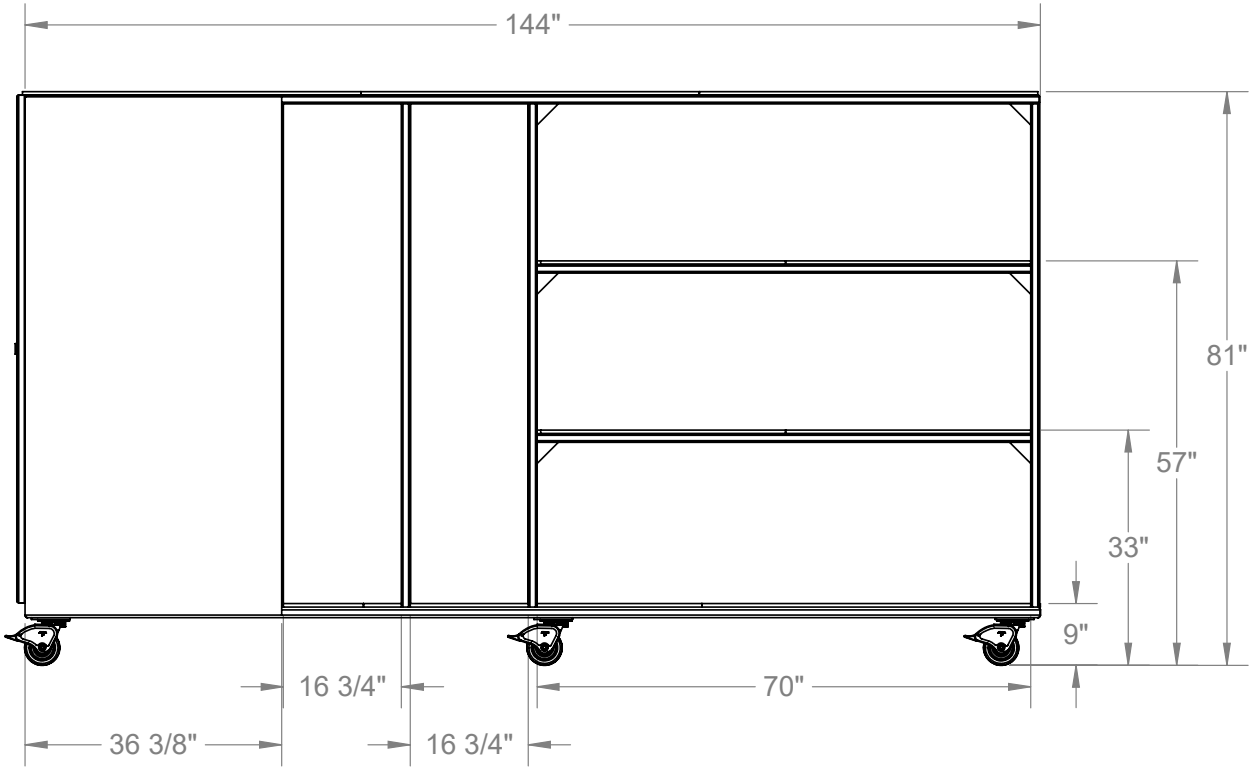
144"
81"
57"
33"
9"
16 3/4"
70"
36 3/8"
16 3/4"