FSH-S92-PM – PHASE MAINTENANCE STANDS

FACTORY SUPPLY INC.
ACCESS TO YOUR INDUSTRIAL NEEDS

FSH-S92-PM
PHASE MAINTENANCE STAND

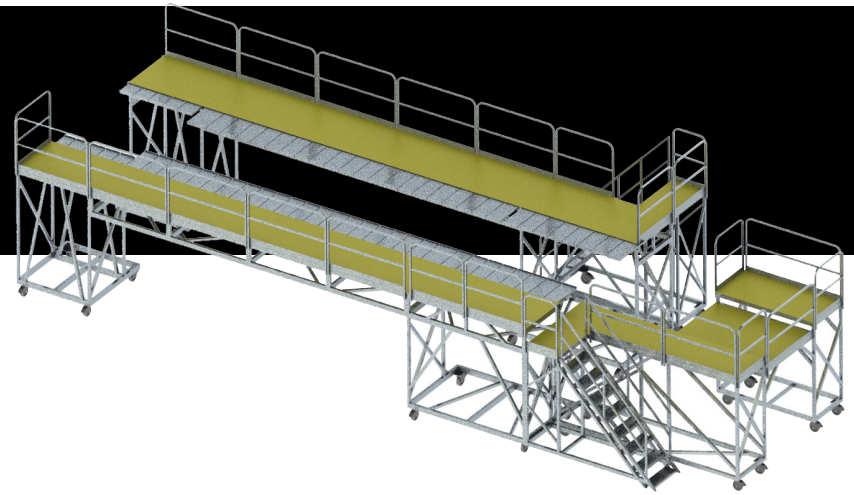

FOR ENGINE, TRANSMISSION, MAIN ROTOR, TAIL ROTOR & FUSELAGE ACCESS

Aircraft technicians use these stands for full phase maintenance and a complete overhaul of the aircraft.

HIGHLIGHTS

- Full phase maintenance fuselage wrap around stands
- Removable hand rails
- 20” locking slide out platform extensions

HELI GRADE SOLUTIONS

TECHNICAL DATA

Height	Fuse: 150"; Tail: 162"	Frame Material	Aluminum
Width	Fuse: 66"; Tail: 162"	Rail Material	Aluminum
Length	Fuse: 410"; Tail: 168"	Padding Material	Contact Areas
Unit Weight	6,125 lbs	Platform Material	Diamond Plate / Fiberplate Composite
Shipping Info (DIMS)	40' Shipping Container	Finish	Mill / Powder Coat Handrails
Upper Deck Height	Fuse: 108" ; Tail: 120"	Certifications	OSHA 1926.1053; ANSI-ASC 14.2-2017
Lower Deck Height	Tail: 72"		
Platform Dimensions	Fuse: 42" x 410"; Tail: 162" x 90"		
Vertical Clearance	Fuse: 150"; Tail: 162"		
Load Capacity	1,500 lbs Per Side		
Stair Capacity	250 lbs		
Step Width	24"		
Caster Size	8"		

OPTIONAL ACCESSORIES

Composite Plate Decking	X
Diamond Plate Decking	X

HELICOPTER APPLICATION

Sikorsky S-92	X

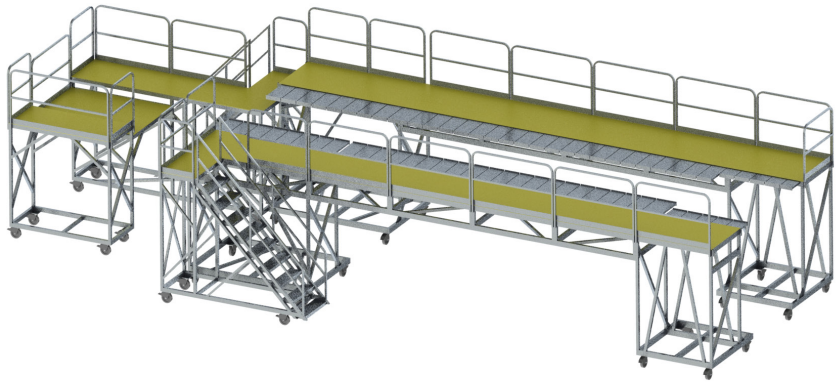

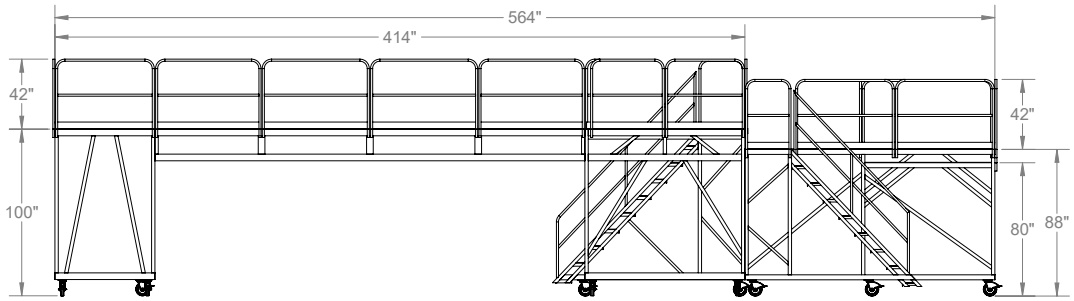
564"
414"
42"
100"
42"
80"
88"

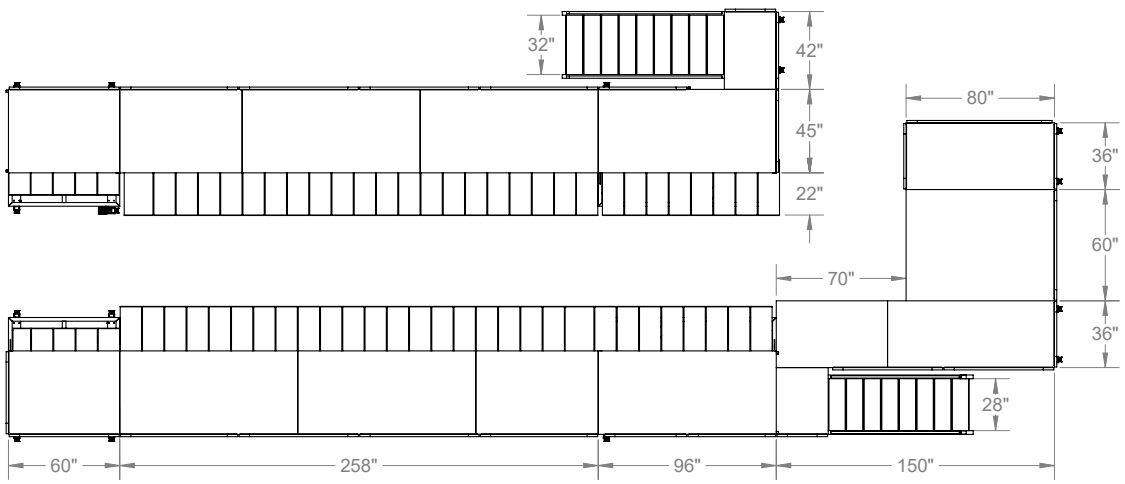
32"
42"
45"
22"
80"
36"
60"
70"
36"
28"
60"
258"
96"
150"

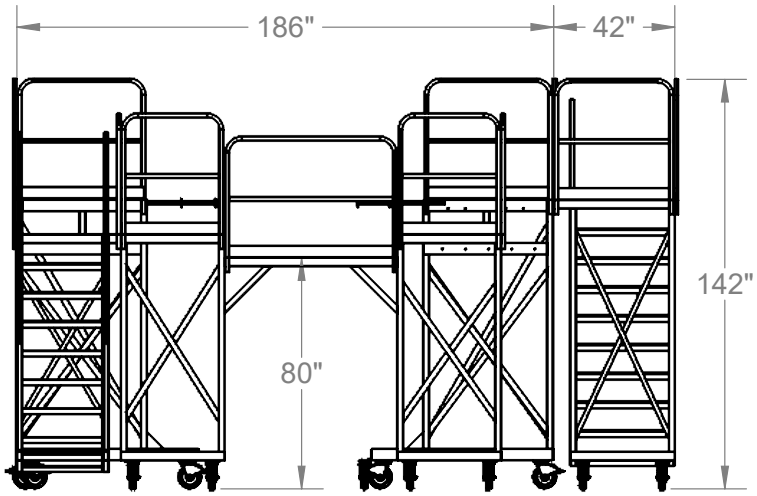
186"
42"
142"
80"