FSH-EC130-PM – MAIN ROTOR/ENGINE/TRANSMISSION ACCESS STAND

FACTORY SUPPLY INC.
ACCESS TO YOUR INDUSTRIAL NEEDS

# FSH-EC130-PM
## MAINTENANCE STAND

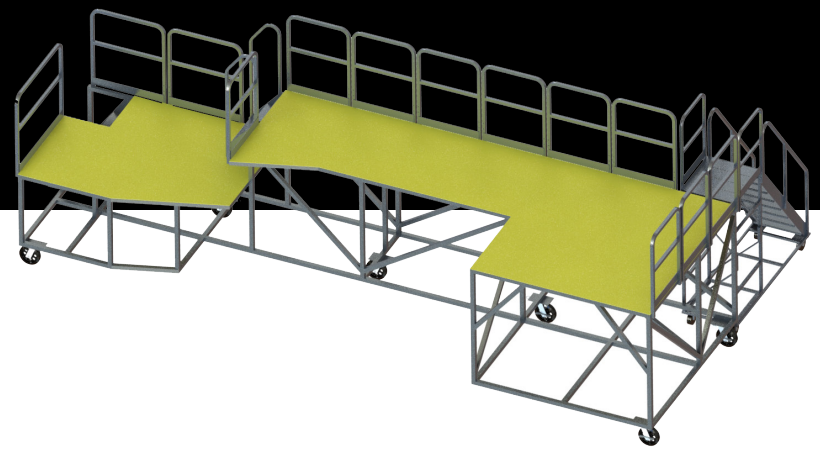

### FOR MAIN ROTOR, ENGINE & TRANSMISSION ACCESS
Aircraft technicians use these stands to safely access the main rotor, transmission and engine access along the fuselage.

### HIGHLIGHTS
- Full wrap around fuselage stand
- Multi-level platform
- Knocks down for ease of shipping
- Removable hand rails
- Aluminum construction

HELI GRADE SOLUTIONS

## TECHNICAL DATA

| | | | |
|---|---|---|---|
| Height | 116" | Frame Material | Aluminum |
| Width | 92" | Rail Material | Aluminum |
| Length | 330" | Padding Material | Contact Areas |
| Unit Weight | 1,500 lbs | Caster Size | 8" |
| Shipping Info (DIMS) | 92" x 326" x 75" x 1,500 lbs | Platform Material | Diamond Plate / Fiberplate Composite |
| Upper Deck Height | 75" | Finish | Mill / Powder Coat Handrails |
| Lower Deck Height | 50" | | |
| Vertical Clearance | 116" | Certifications | OSHA 1926.1053; ANSI-ASC 14.2-2017 |
| Platform Dimensions | 90" x 44"; 132" x 48"; 72" x 96" | | |
| Load Capacity | 1,200 lbs Per Side | | |
| Deck Capacity | 1,200 lbs Per Side | | |
| Stair Capacity | 250 lbs | | |
| Step Width | 24" | | |

## OPTIONAL ACCESSORIES

| | |
|---|---|
| Composite Plate Decking | X |
| Diamond Plate Decking | X |
| Tool Trays | X |

## HELICOPTER APPLICATION

| | |
|---|---|
| Eurocopter EC-130 / 135 | X |
| Airbus H130 / 135 | X |

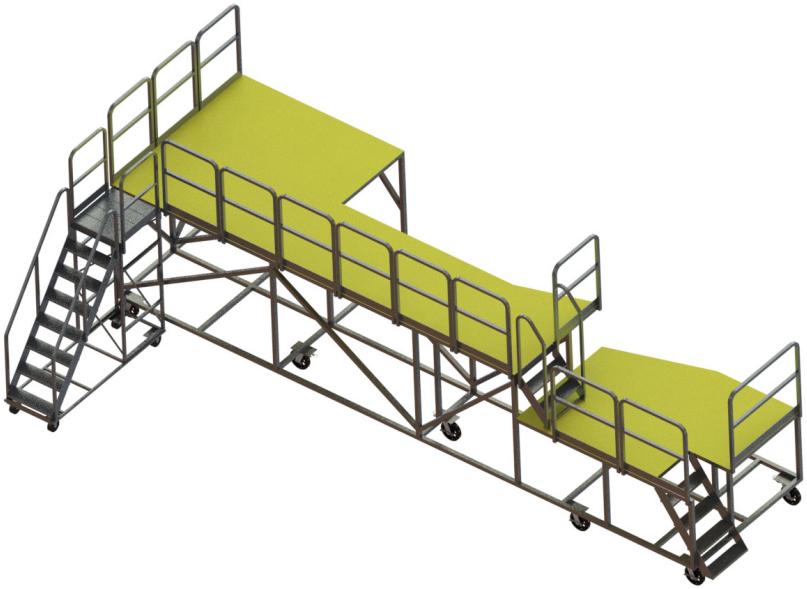

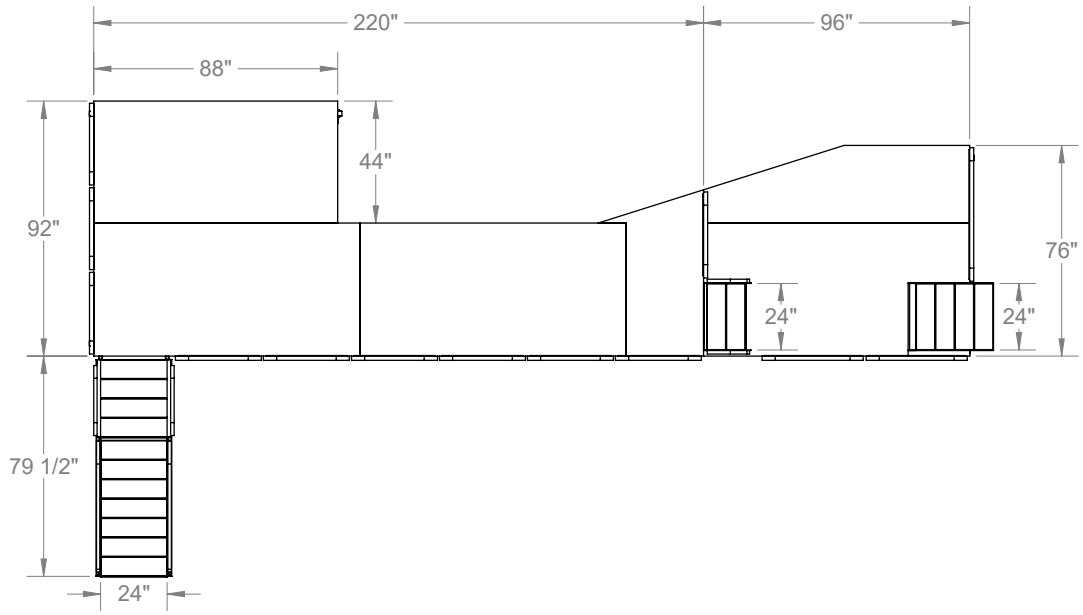
220"
96"
88"
44"
92"
76"
24"
24"
79 1/2"
24"

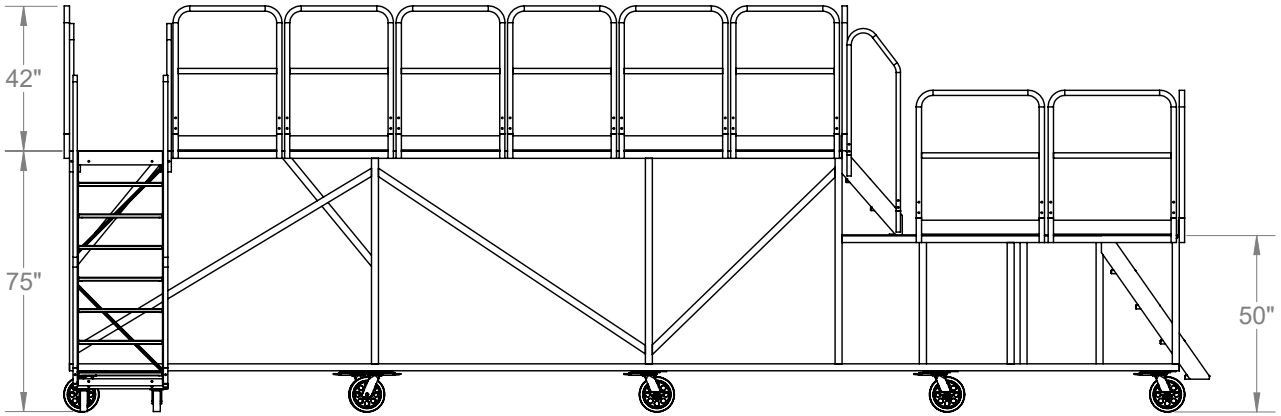
42"
75"
50"

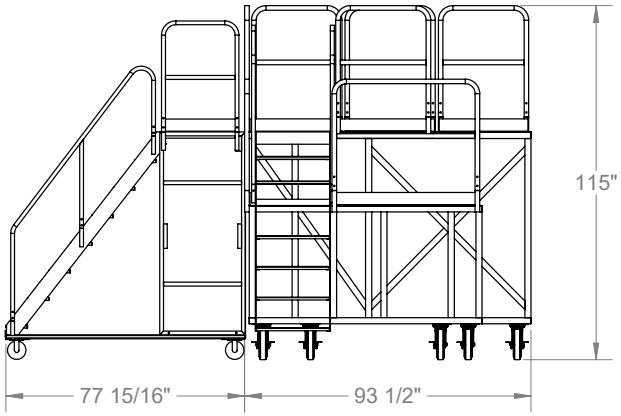
115"
77 15/16"
93 1/2"