FSH-1600 – ROTOR ACCESS STAND

FACTORY SUPPLY INC.
ACCESS TO YOUR INDUSTRIAL NEEDS

FSH-1600
ACCESS STAND

FOR TAIL ROTOR ACCESS
Aircraft technicians use these stands for routine inspection, maintenance, and repair of helicopter tail rotor components.

HIGHLIGHTS
- Light-weight aluminum construction
- Compact design
- Removable hand rails
- Multi-person access

HELI GRADE SOLUTIONS

TECHNICAL DATA

Height	68"	Frame Material	Aluminum
Width	40"	Rail Material	Aluminum
Length	103"	Padding Material	Contact Areas
Unit Weight	275 lbs	Caster Size	5"
Shipping Info (DIMS)	32" x 103" x 43" x 275 lbs	Platform Material	Diamond Plate / Fiberplate Composite
Upper Deck Height	32"	Finish	Mill / Powder Coat Handrails
Lower Deck Height	22"		
Vertical Clearance	68"	Certifications	OSHA 1926.1053; ANSI-ASC 14.2-2017
Platform Dimensions	48" x 42" (X2)		
Load Capacity	500 lbs		
Deck Capacity	500 lbs		
Stair Capacity	250 lbs		
Step Width	30"		

OPTIONAL ACCESSORIES

Composite Plate Decking	X
Diamond Plate Decking	X
Tool Trays	X

HELICOPTER APPLICATION

Bell 206 / 406	X
Eurocopter EC-130 / 135	X
Eurocopter EC-145	X

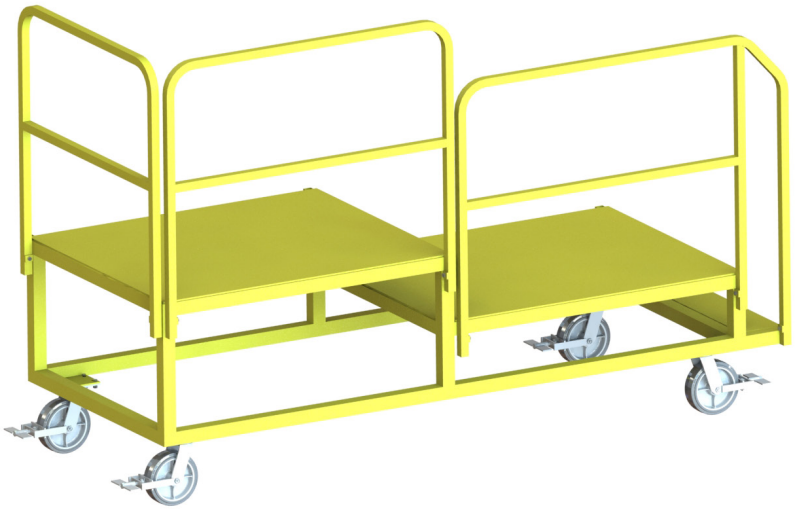

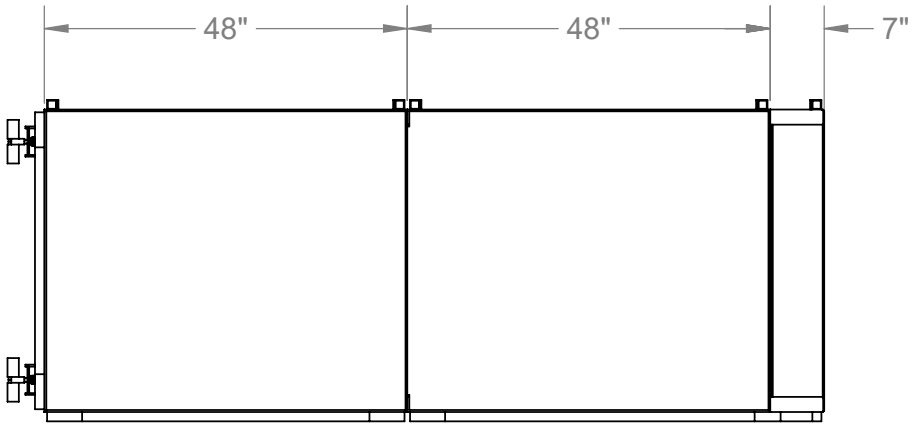
48"
48"
7"

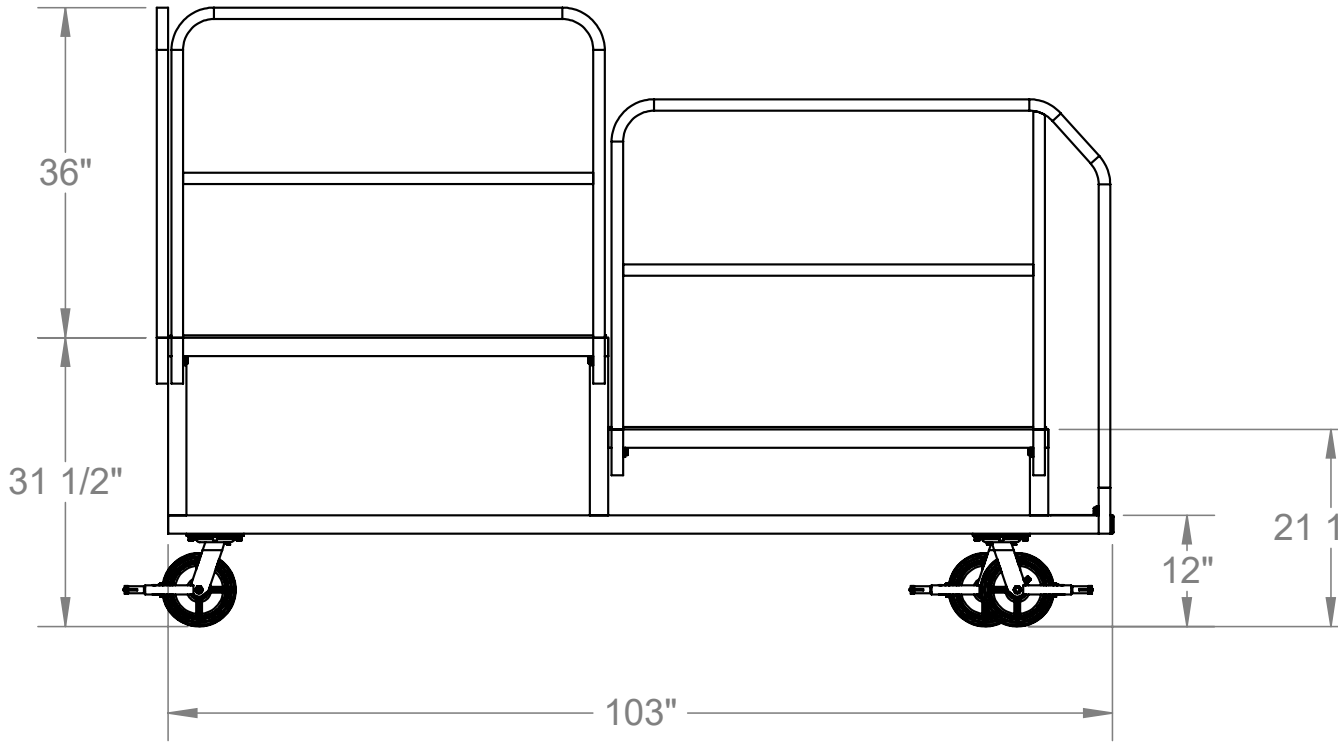
36"
31 1/2"
21 1
12"
103"

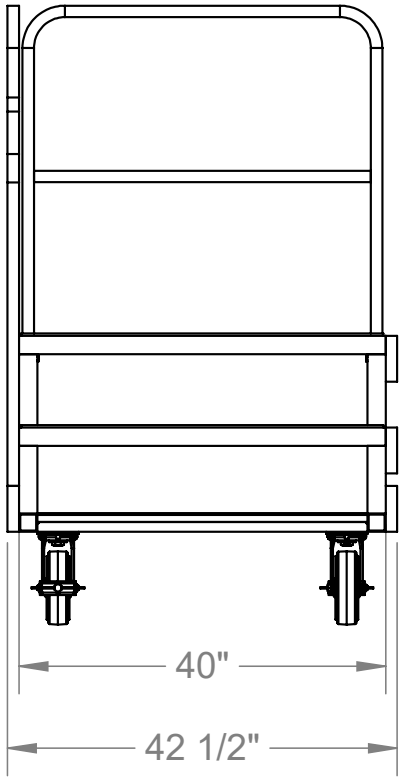
40"
42 1/2"