FSH-1510 – FUSELAGE/ROTOR/TAIL ACCESS STAND

FACTORY SUPPLY INC.
ACCESS TO YOUR INDUSTRIAL NEEDS

FSH-1510
ACCESS STAND

FOR ENGINE, ROTOR & TAIL ACCESS
Aircraft technicians use these stands for routine inspection, maintenance, and repair of helicopter components.

HIGHLIGHTS
- Safety step lock
- Heavy duty steel construction
- Durable powder coat finish
- Removable hand rails

HELI GRADE SOLUTIONS

TECHNICAL DATA

Height	124"
Width	68"
Length	38"
Unit Weight	320 lbs
Shipping Info (DIMS)	100" x 41" x 70" x 310 lbs
Deck Height	80"
Vertical Clearance	122"
Platform Dimensions	36" x 17"
Load Capacity	350 lbs
Deck Capacity	350 lbs
Stair Capacity	250 lbs
Step Width	36"
Frame Material	Steel

Rail Material	Steel
Padding Material	Contact Areas
Caster Size	5"
Platform Material	Diamond Plate / Fiberplate Composite
Finish	Powder Coat
Certifications	OSHA 1926.1053; ANSI-ASC 14.2-2017

OPTIONAL ACCESSORIES

Diamond Plate Decking	X
Grip-Strut Tread	X
Tool Trays	X

HELICOPTER APPLICATION

Sikorsky UH-60	X
Sikorsky MH-60	X
Sikorsky SH-60	X
Sikorsky S-72	X
Sikorsky S-92	X

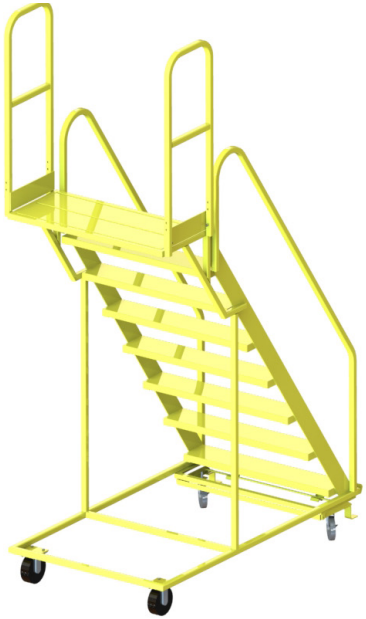

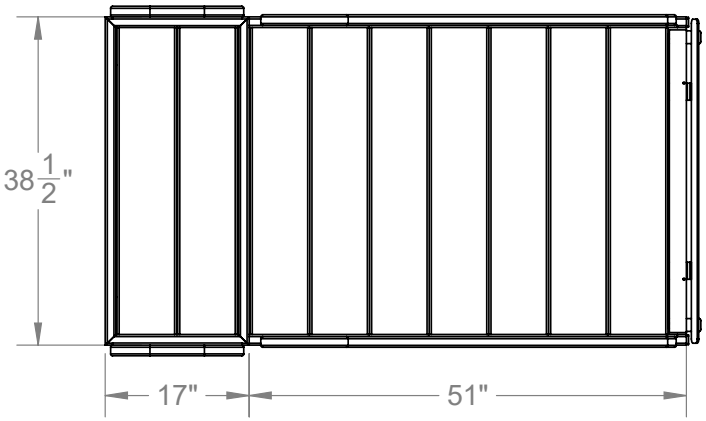
38 1/2"
17"
51"

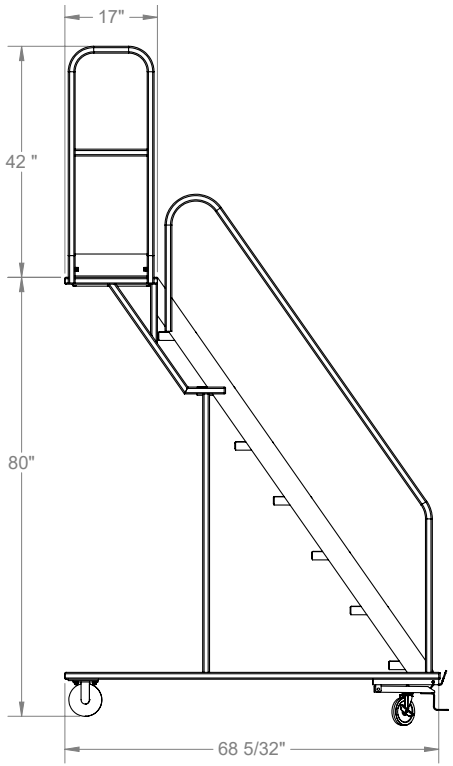
17"
42 "
80"
68 5/32"

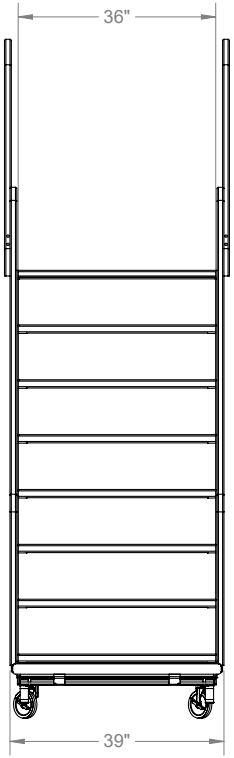
36"
39"