FSH-1500 – FUSELAGE/ENGINE/ROTOR ACCESS STAND

FACTORY SUPPLY INC.
ACCESS TO YOUR INDUSTRIAL NEEDS

FSH-1500
ACCESS STAND

FOR ENGINE, ROTOR & TAIL ACCESS
Aircraft technicians use these stands for routine inspection, maintenance, and repair of helicopter components.

HIGHLIGHTS
- Flip down access step
- Light-weight aluminum construction
- Main rotor and tail rotor access
- Rubber bumpers in all contact areas

HELI GRADE SOLUTIONS

TECHNICAL DATA

Height	96"	Frame Material	Aluminum
Width	40"	Rail Material	Aluminum
Length	70"	Padding Material	Contact Areas
Unit Weight	150 lbs	Caster Size	8”
Shipping Info (DIMS)	96" x 40" x 70" x 150 lbs	Platform Material	Diamond Plate / Fiberplate Composite
Upper Deck Height	70"	Finish	Mill / Powder Coat Handrails
Lower Deck Height	60"		
Vertical Clearance	96"	Certifications	OSHA 1926.1053; ANSI-ASC 14.2-2017
Platform Dimensions	35" x 35"		
Load Capacity	350 lbs		
Deck Capacity	350 lbs		
Stair Capacity	250 lbs		
Step Width	34"		

OPTIONAL ACCESSORIES

Diamond Plate Decking	X
Grip-Strut Tread	X
Tool Trays	X

HELICOPTER APPLICATION

Bell 204 / 205	X
Bell 206	X
Bell 407	X
Bell 427	X
Bell 429	X
Eurocopter / Airbus EC135	X
Eurocopter / Airbus H135	X
Eurocopter / Airbus EC145	X
Eurocopter / Airbus H145	X

UPPER ACCESS STEP IN EXTENDED POSITION
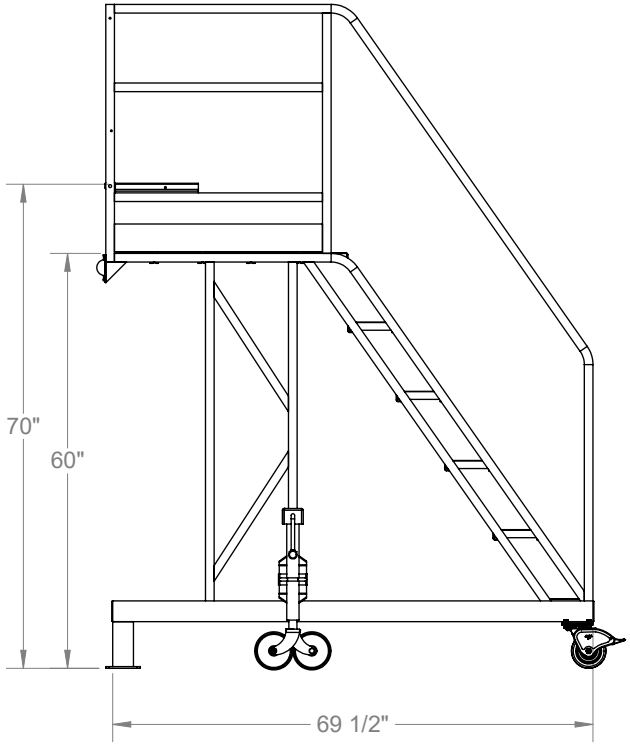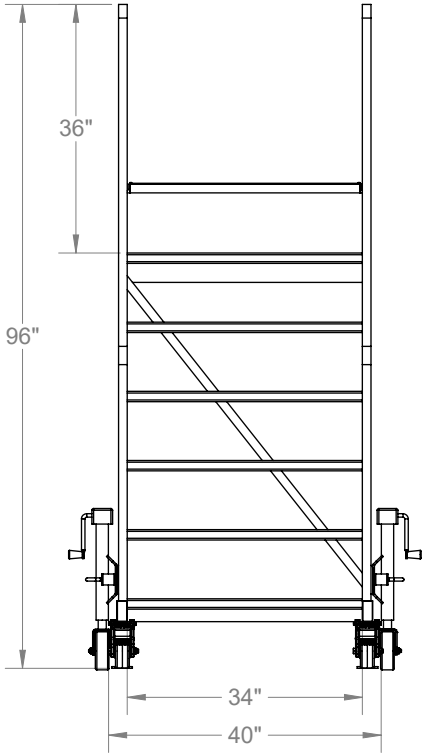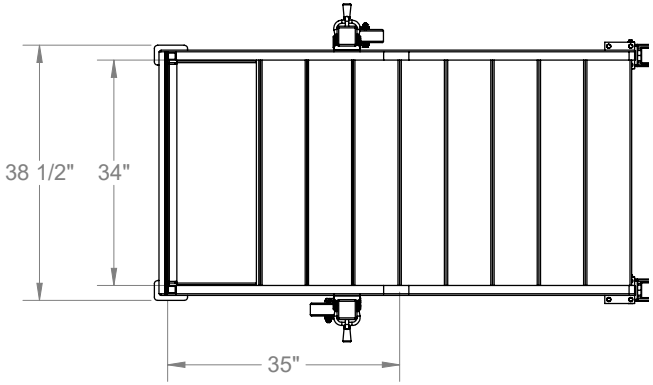
UPPER ACCESS STEP IN FOLDED POSITION