FSH-1030 – FUSELAGE/ENGINE/ROTOR ACCESS STAND

FACTORY SUPPLY INC.
ACCESS TO YOUR INDUSTRIAL NEEDS

FSH-1030
ACCESS STAND

FOR FUSELAGE, ENGINE & ROTOR ACCESS
Aircraft technicians use these stands for routine inspection, maintenance, and repair of helicopter components.

HIGHLIGHTS
- Heavy duty steel construction
- Large 8” casters for exceptional maneuverability
- Multi-level access platforms
- Conforms to fuselage of aircraft
- Rubber bumpers in all contact areas

HELI GRADE SOLUTIONS

TECHNICAL DATA

Height	135"	Step Width	24"
Width	51"	Frame Material	Steel
Length	106"	Rail Material	Steel
Unit Weight	860 lbs	Padding Material	Contact Areas
Shipping Info (DIMS)	140" x 75" x 55" x 860 lbs	Caster Size	8”
Upper Deck Height	70"	Platform Material	Diamond Plate / Fiberplate Composite
Lower Deck Height	40"	Finish	Powder Coat
Vertical Clearance	106"	Certifications	OSHA 1926.1053; ANSI-ASC 14.2-2017
Platform Dimensions	55" x 24"; 92" x 27"; 21" x 27"		
Load Capacity	500 lbs		
Deck Capacity	500 lbs Lower / 300 lbs Folding Platform		
Stair Capacity	250 lbs		

OPTIONAL ACCESSORIES

Composite Plate Decking	X
Diamond Plate Decking	X
Tool Trays	X

HELICOPTER APPLICATION

Bell 204	X
Bell 205	X
Bell 212	X
Bell 214	X
Bell 412	X
Huey Variants	X

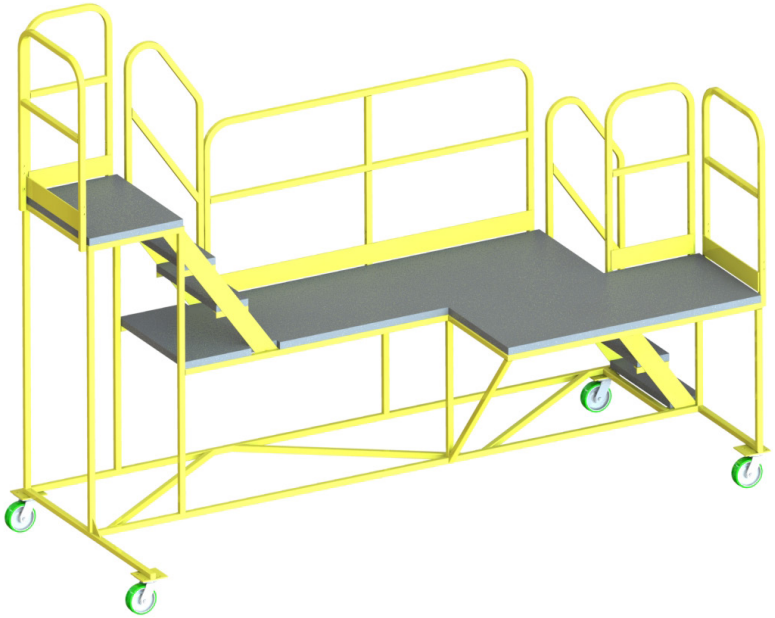

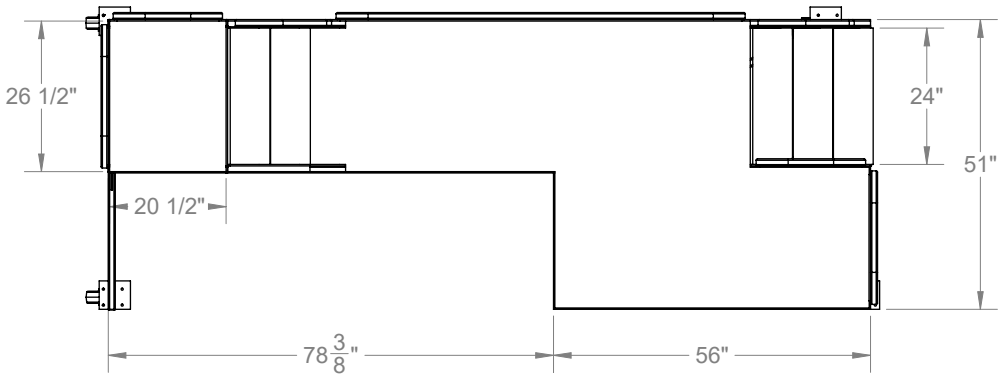
26 1/2"
24"
51"
20 1/2"
78 3/8"
56"

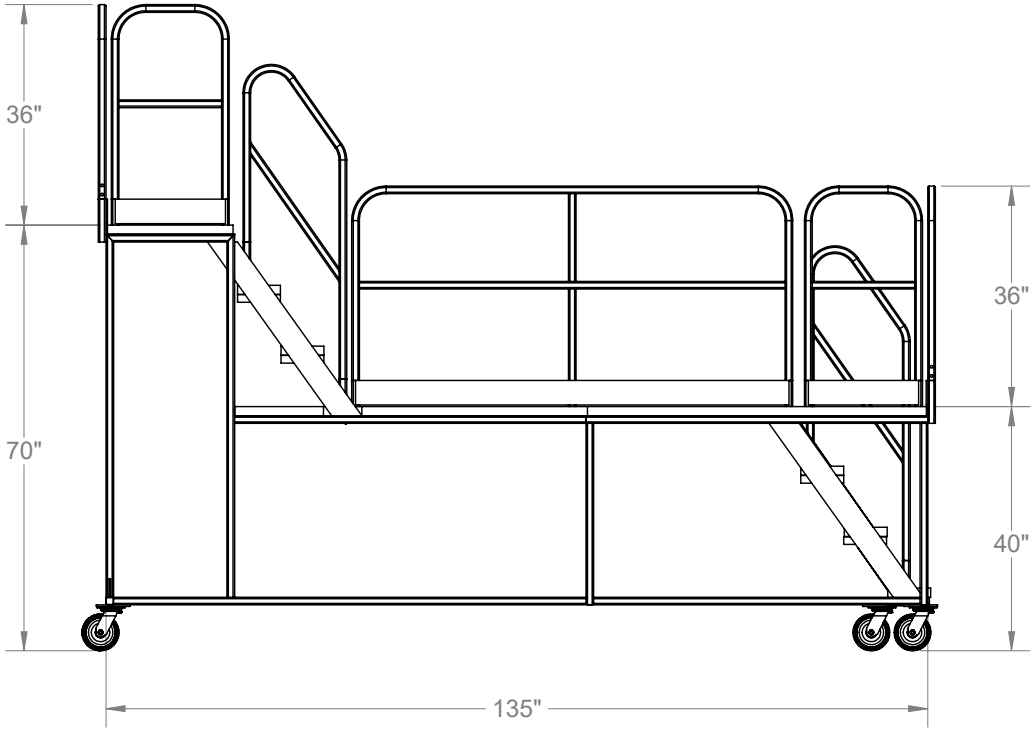
36"
70"
36"
40"
135"

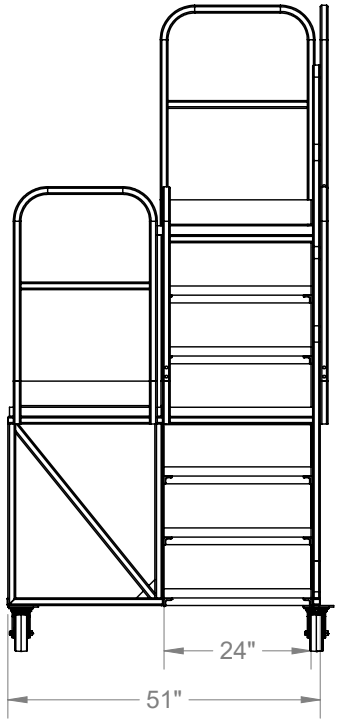
24"
51"