FSH-1010 – FUSELAGE/ENGINE/ROTOR ACCESS STAND

FACTORY SUPPLY INC.
ACCESS TO YOUR INDUSTRIAL NEEDS

FSH-1010
ACCESS STAND

FOR FUSELAGE, ENGINE & ROTOR ACCESS
Aircraft technicians use these stands for routine inspection, maintenance, and repair of helicopter components.

HIGHLIGHTS
- Folding upper access platform
- Removable hand rails
- Light-weight aluminum construction
- Exceptional maneuverability
- Self-supported cantilever design fits around / over landing skids

HELI GRADE SOLUTIONS

TECHNICAL DATA

Height	102"	Step Width	24"
Width	24"	Frame Material	Aluminum
Length	111"	Rail Material	Aluminum
Unit Weight	525 lbs	Padding Material	Contact Areas
Shipping Info (DIMS)	102" x 55" x 85" x 525 lbs	Caster Size	8”
Upper Deck Height	81"	Platform Material	Diamond Plate / Fiberplate Composite
Lower Deck Height	41" / 31"	Finish	Mill / Powder Coat Handrails
Vertical Clearance	117"		
Platform Dimensions	32" x 32"; 68" x 25"; 37" x 32"	Certifications	OSHA 1926.1053; ANSI-ASC 14.2-2017
Load Capacity	500 lbs		
Deck Capacity	500 lbs Lower / 300 lbs Folding Platform		
Stair Capacity	250 lbs		

OPTIONAL ACCESSORIES

Composite Plate Decking	X
Diamond Plate Decking	X
Tool Trays	X

HELICOPTER APPLICATION

Eurocopter EC145	X
Airbus H145	X
Eurocopter UH-72 Lakota	X

UPPER ACCESS PLATFORM IN EXTENDED POSITION
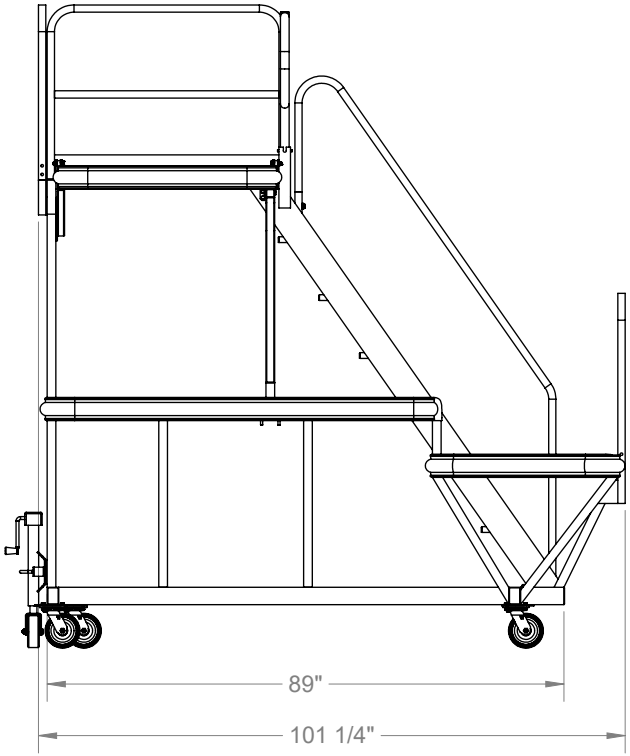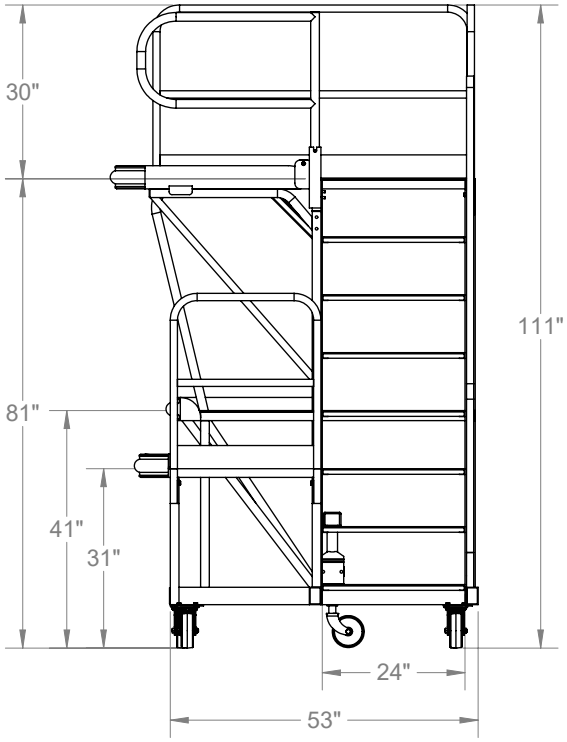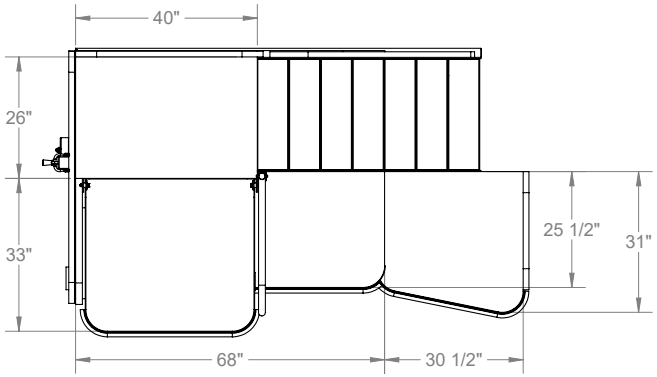
UPPER ACCESS PLATFORM IN FOLDED POSITION