FSH-011F

FACTORY SUPPLY INC.
ACCESS TO YOUR INDUSTRIAL NEEDS

FSH-011F
MAINTENANCE STAND

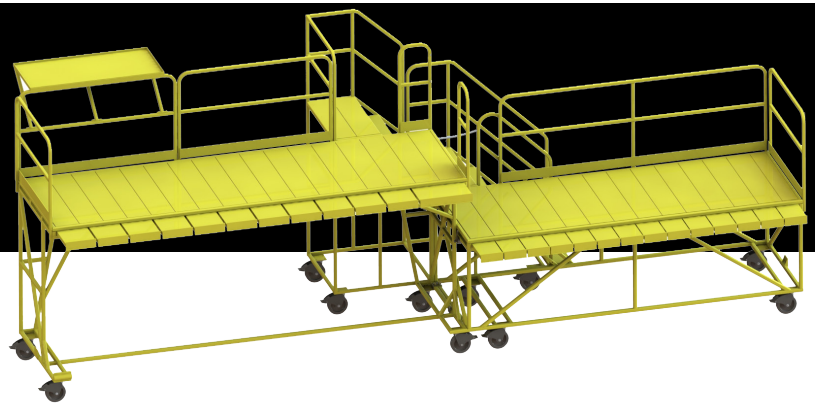

FOR ENGINE, ROTOR TRANSMISSION & FUSELAGE ACCESS

Aircraft technicians use these stands to safely access the main rotor, transmission and engine access along the fuselage.

HIGHLIGHTS

- Kick-out slide platform extensions
- Heavy duty steel construction
- Durable powder coat finish

HELI GRADE SOLUTIONS

TECHNICAL DATA

Height	110"	Frame Material	Steel
Width	84"	Rail Material	Steel
Length	300"	Padding Material	Contact Areas
Unit Weight	3,500 lbs	Platform Material	Diamond Plate / Serrated Grip Strut
Shipping Info (DIMS)	74" x 48" x 375" x 3,500 Lbs	Finish	Powder Coat
Upper Deck Height	74"	Certifications	OSHA 1926.1053; ANSI-ASC 14.2-2017
Lower Deck Height	48"		
Platform Dimensions	164" x 48" / 132" x 48"		
Vertical Clearance	110"		
Load Capacity	1,500 lbs		
Stair Capacity	250 lbs		
Step Width	36"		
Caster Size	8"		

OPTIONAL ACCESSORIES

Tool Trays	X

HELICOPTER APPLICATION

Sikorsky UH-60	X
Sikorsky MH-60	X
Sikorsky SH-60	X
Sikorsky HH-60	X
Sikorsky S-76	X

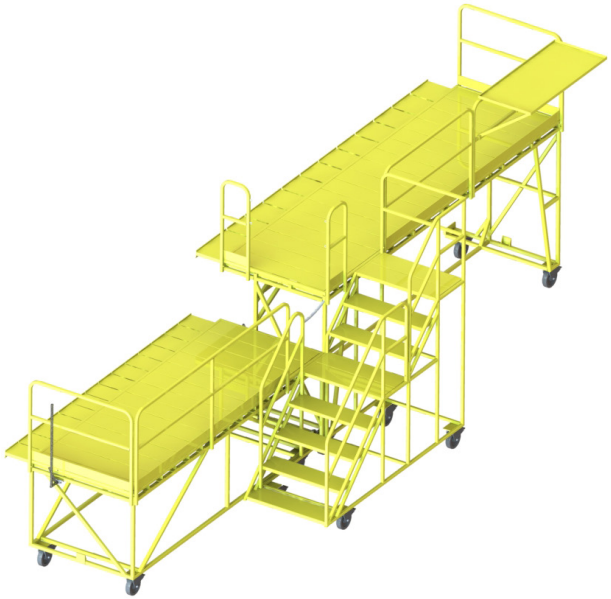

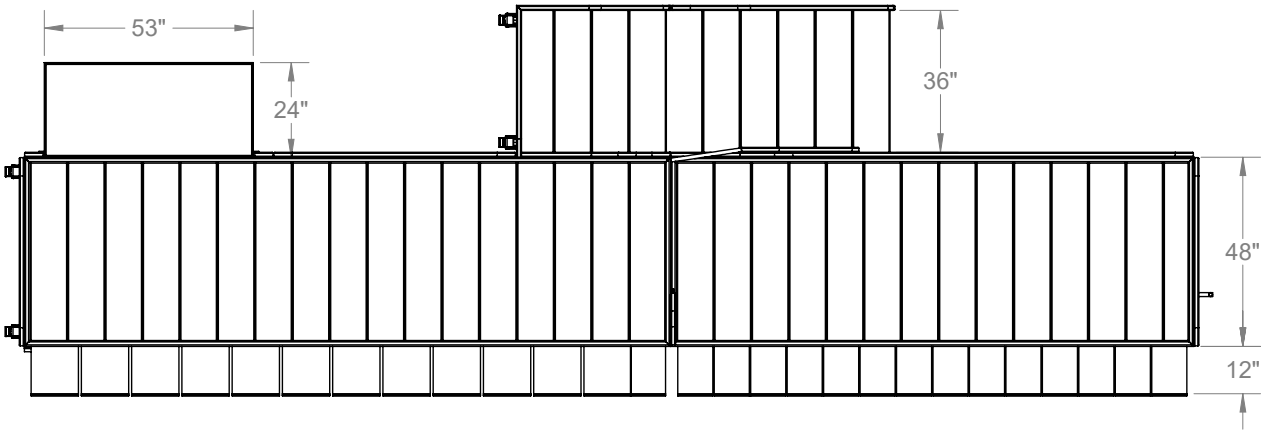
53"
24"
36"
48"
12"

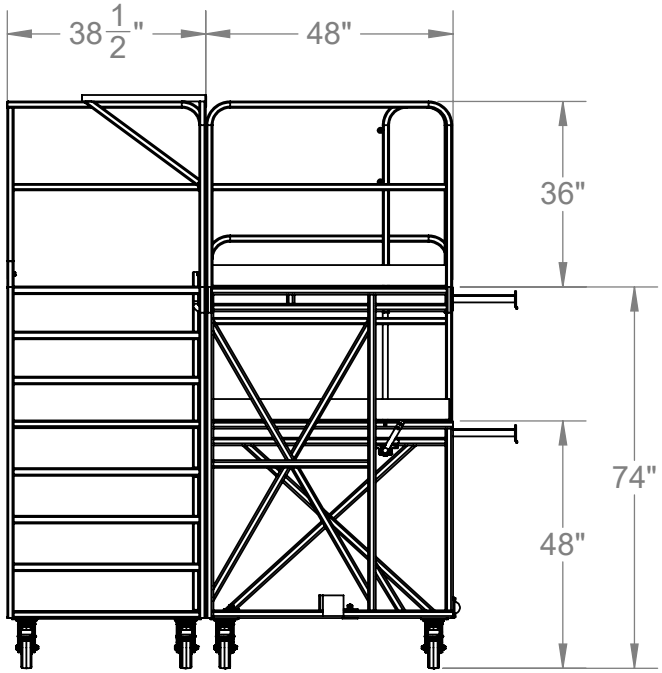
38 1/2"
48"
36"
74"
48"

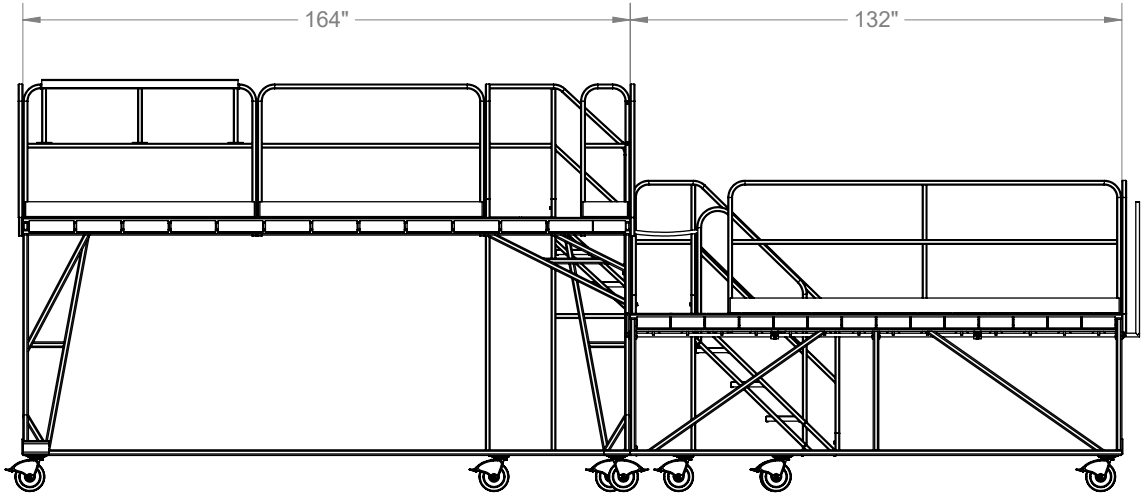
164"
132"