FACTORY SUPPLY.COM

FSH-HD-02
HELICOPTER DOLLY

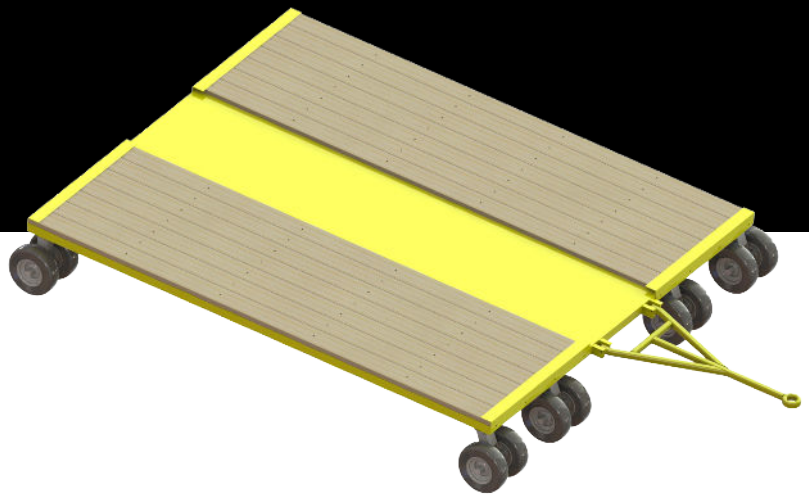

FOR HELICOPTER PART STORAGE
Aircraft technicians use these dollies for rotorcraft transportation.

HIGHLIGHTS
- Tow bar
- Breaks down for shipping
- Pneumatic ground support casters
- Replaceable wood decking

HELI GRADE SOLUTIONS

TECHNICAL DATA

Height	24"
Width	144"
Length	168"
Unit Weight	2,700 lbs
Shipping Info (DIMS)	144" x 168" x 12" x 2,700 lbs
Vertical Clearance	24"
Platform Dimensions	144" x 168"
Load Capacity	6,000 lbs
Caster Size	15”
Frame Material	Steel
Rail Material	Steel
Padding Material	Contact Areas
Finish	Powder Coat
Certifications	OSHA 1926.1053; ANSI-ASC 14.2-2017

OPTIONAL ACCESSORIES

Wood Decking	X
Steel Decking	X

HELICOPTER APPLICATION

Small - Medium Rotorcraft	X

24"

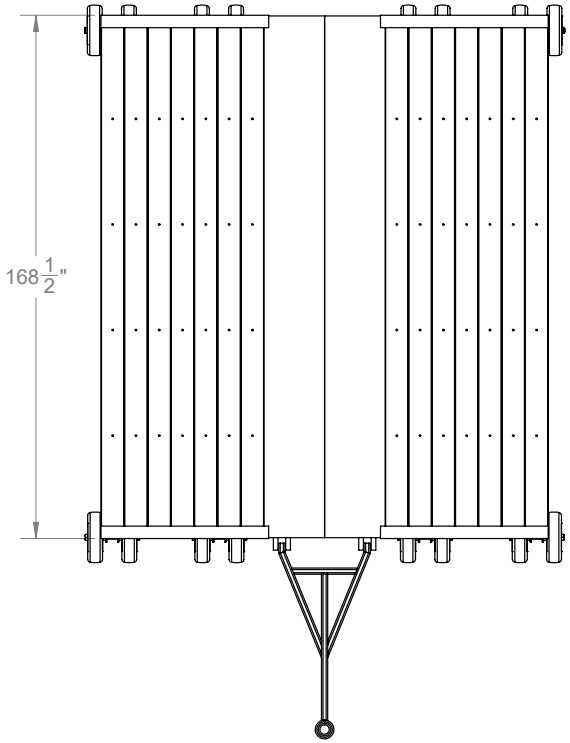
168 1/2"

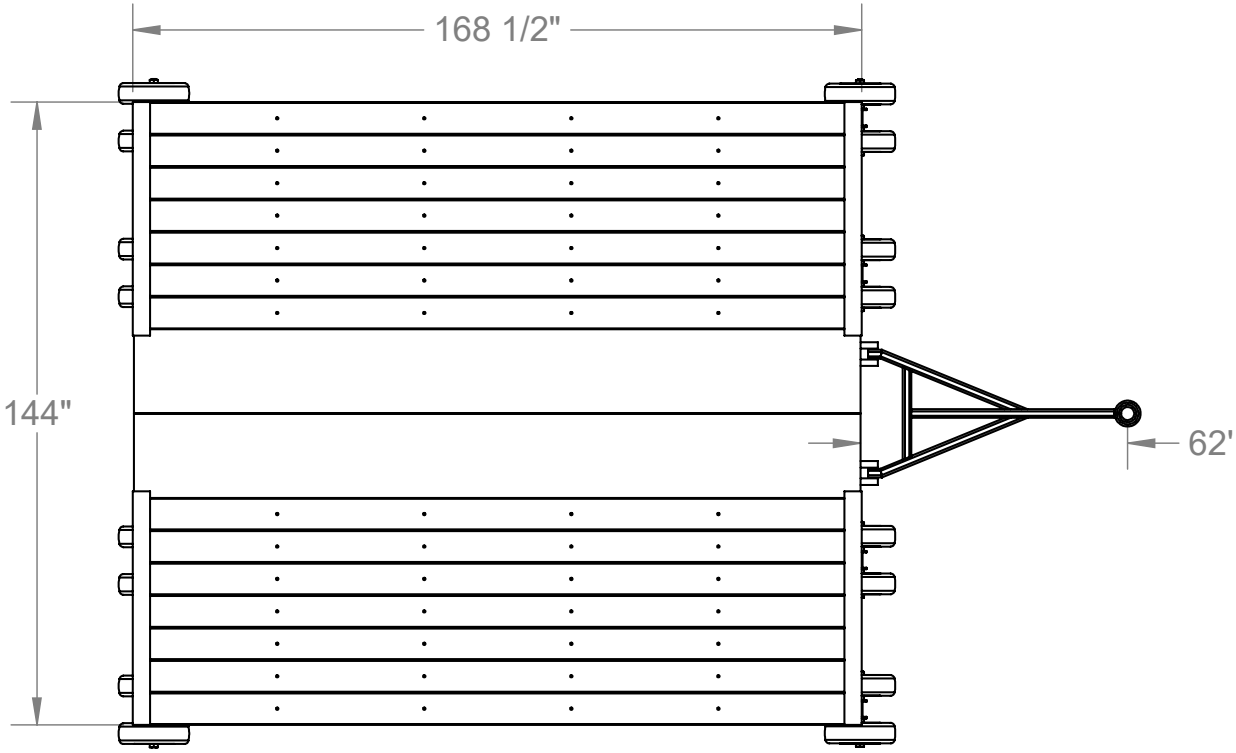
168 1/2"
144"
62'

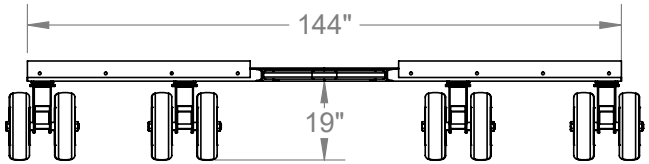
144"
19"