REVISION HISTORY				
REV	ECN	DESCRIPTION	DATE	APPROVED
A		ISSUED FOR FABRICATION		

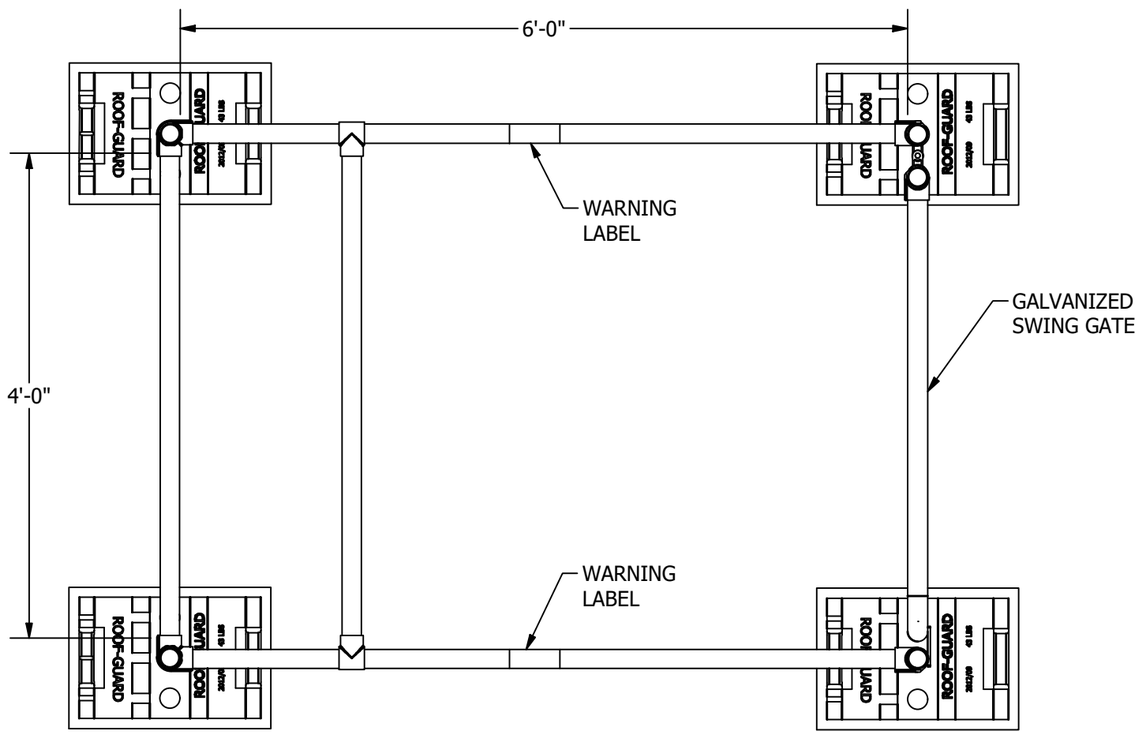

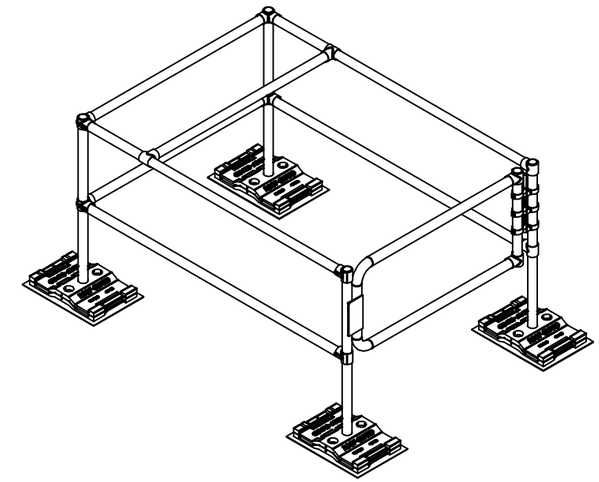

NOTES:

1. INSTALLATION MUST COMPLY WITH ROOF GUARD INSTALLATION MANUAL AS WELL AS BUILDING CODE REQUIREMENTS.
2. GUARDRAIL CONFIGURATION MUST BE AS SHOWN TO COMPLY WITH LOADING REQUIREMENTS OF ONTARIO BUILDING CODE (2006) SECTION 4.1.5.15.1b AND 4.1.5.15.4, AS WELL AS THE NATIONAL BUILDING CODE OF CANADA (2005) SECTION 4.1.5.15.1b AND 4.1.5.15.4.
3. FOR IRREGULAR CONFIGURATIONS NOT MEETING THE SPAN OR TIE-BACK SPACING LISTED ABOVE, PLEASE CONTACT FOR A CUSTOM ENGINEERED SOLUTION TO MEET THE REQUIREMENTS.
4. NO MODIFICATIONS SHALL BE MADE TO THE SYSTEM WITHOUT PERMISSION IN WRITING FROM ROOF GUARD AND THE ENGINEER.
5. ALL SET SCREWS TO BE TORQUED TO 13 FT-LBS.
6. ONE SET SCREW PER BASEPLATE, WITH BOTTOM BASE PLATE SET SCREW LINING UP WITH PILOT HOLE IN VERTICAL PIPE.
7. EACH BASEPLATE SITS ON A 1/8" MASTICATED RUBBER PAD TO PROVIDE PROTECTION TO THE ROOFING MEMBRANE.
8. GUARDRAIL TO BE 1.5" SCHEDULE 40 6061-T6 ALUMINUM PIPE.

Designed by: D.K.
Drafted by: E.D.
Checked by:
Date:
Origin#

General Tolerance
Angular ± 1/2˚
Fraction ± 1/16
.xxx ± 0.005
.xx ± 0.010
.x ± 0.020

GARGOYLE ROOFTOP GUARDRAIL SYSTEMS
www.factorysupply.com T. (727) 347-4820/1-800-977-2005
Email: sales@factorysupply.com F. (727) 347-4830

GARGOYLE rooftop guardrail systems

THIS DRAWING AND THE INTELLECTUAL INFORMATION ON THIS DRAWING ARE THE PROPERTY OF FACTORY SUPPLY AND MAY NOT BE REPRODUCED OR USED IN ANY MANNER WITHOUT OUR WRITTEN CONSENT

ALL MEASUREMENTS IN IMPERIAL UNITS - INCH/POUND/DEGREE

Description: Gargoyle Hatch Guardrail - 4ft x 6ft

Third Angle Projection	Weight:	Sheet:	Scale:	DWG#	REV
	357 lbmass	1 of 1	1/15	HG-KIT-4X6	A

REVISION HISTORY				
REV	ECN	DESCRIPTION	DATE	APPROVED
A		ISSUED FOR FABRICATION		

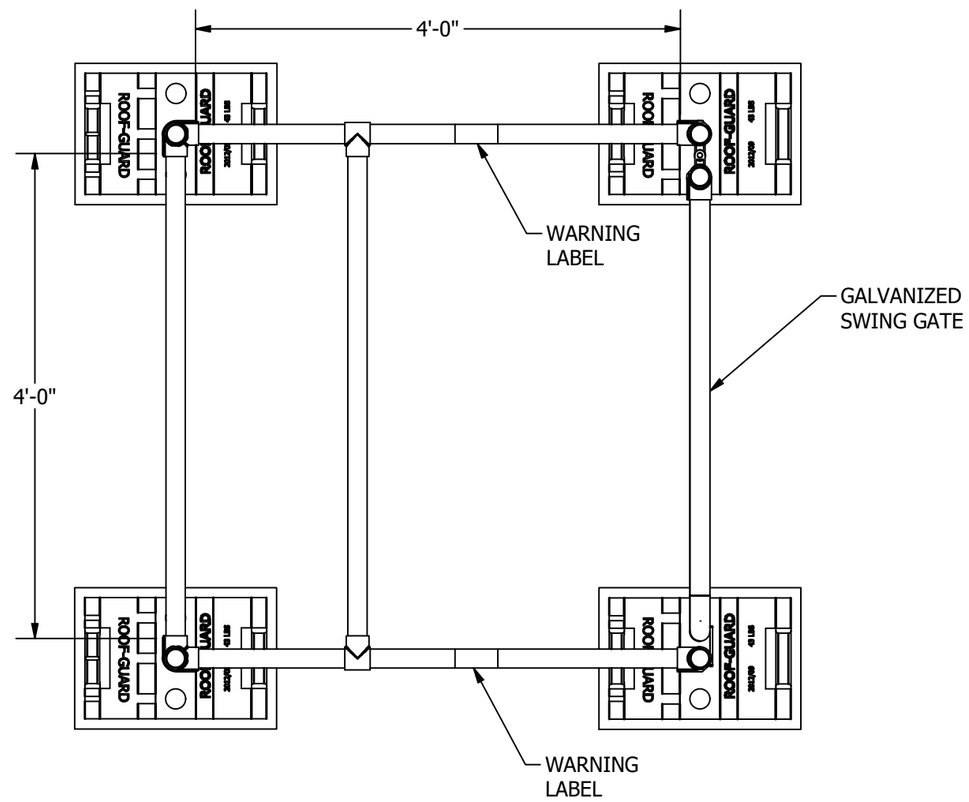

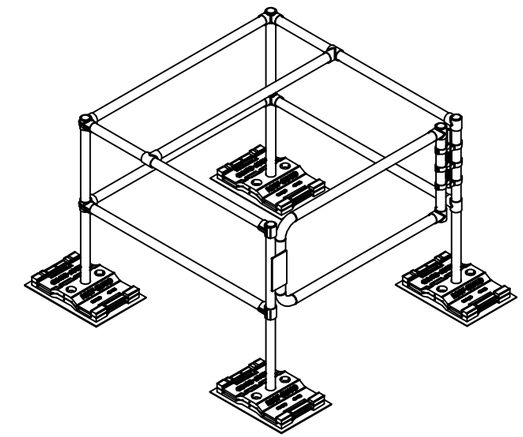

NOTES:

1. INSTALLATION MUST COMPLY WITH ROOF GUARD INSTALLATION MANUAL AS WELL AS BUILDING CODE REQUIREMENTS.
2. GUARDRAIL CONFIGURATION MUST BE AS SHOWN TO COMPLY WITH LOADING REQUIREMENTS OF ONTARIO BUILDING CODE (2006) SECTION 4.1.5.15.1b AND 4.1.5.15.4, AS WELL AS THE NATIONAL BUILDING CODE OF CANADA (2005) SECTION 4.1.5.15.1b AND 4.1.5.15.4.
3. FOR IRREGULAR CONFIGURATIONS NOT MEETING THE SPAN OR TIE-BACK SPACING LISTED ABOVE, PLEASE CONTACT FOR A CUSTOM ENGINEERED SOLUTION TO MEET THE REQUIREMENTS.
4. NO MODIFICATIONS SHALL BE MADE TO THE SYSTEM WITHOUT PERMISSION IN WRITING FROM ROOF GUARD AND THE ENGINEER.
5. ALL SET SCREWS TO BE TORQUED TO 13 FT-LBS.
6. ONE SET SCREW PER BASEPLATE, WITH BOTTOM BASE PLATE SET SCREW LINING UP WITH PILOT HOLE IN VERTICAL PIPE.
7. EACH BASEPLATE SITS ON A 1/8" MASTICATED RUBBER PAD TO PROVIDE PROTECTION TO THE ROOFING MEMBRANE.
8. GUARDRAIL TO BE 1.5" SCHEDULE 40 6061-T6 ALUMINUM PIPE.

Designed by: D.K.
Drafted by: E.D.
Checked by:
Date:
Origin#

General Tolerance
Angular ± 1/2˚
Fraction ± 1/16
.xxx ± 0.005
.xx ± 0.010
.x ± 0.020

GARGOYLE ROOFTOP GUARDRAIL SYSTEMS
www.factorysupply.com T. (727) 347-4820/1-800-977-2005
Email: sales@factorysupply.com F. (727) 347-4830

GARGOYLE rooftop guardrail systems

THIS DRAWING AND THE INTELLECTUAL INFORMATION ON THIS DRAWING ARE THE PROPERTY OF FACTORY SUPPLY AND MAY NOT BE REPRODUCED OR USED IN ANY MANNER WITHOUT OUR WRITTEN CONSENT

ALL MEASUREMENTS IN IMPERIAL UNITS - INCH/POUND/DEGREE

Description: Gargoyle Hatch Guardrail - 4ft x 4ft

Third Angle Projection	Weight:	Sheet:	Scale:	DWG#	REV
	349 lbmass	1 of 1	1/15	HG-KIT-08	A